0. Revision history

date	Ver.	Modified by
10/27/2022	1.0.0	DN Kim
11/1/2022	1.0.1	DN Kim

Modified Tap
ALL TAP
0-1 0-2

modification item
New (Prepared based on Samsung foundy's ZECH") _ Analog
-. Add to 0-1Tap (Check fo IP registration) -. Add to 0-2Tap (Changing summary)

0.1 Check for IP Registratio

Category	Check item
Technology Check	CheckPDK information
	IO Cell DK Version
	Standard Cell DK Version
	Gate Poly Direction
	Mother circuit
	Technical Standard
	Target application
	Automotive
	DFT(BIST) Feature for mass production
	Boundary Scan (JTAG)
	Silicon history

Pre-Silicon Design Check	Operating Supply Voltage/Temperature Range (Spec)
	Sign-off corners (Simulation) and Margin
	Monte Carlo Simulation
	Timing Sign-off corners and margin
	Timing Sign-off criteria
	Custom Digital Timing Check
	Power on/off sequence check
	Integration level check
	ESD
	Bias(Over Stress) check

	Floating Gate check
	DC leakage path check
	Bulk check (In case of FDS process)
Physical Verification Review	DRC
	LVS
	ERC
	FLT
	ANTENNA
	DFM (MAS/LFD/VRC/PM/etc)
	Layer check

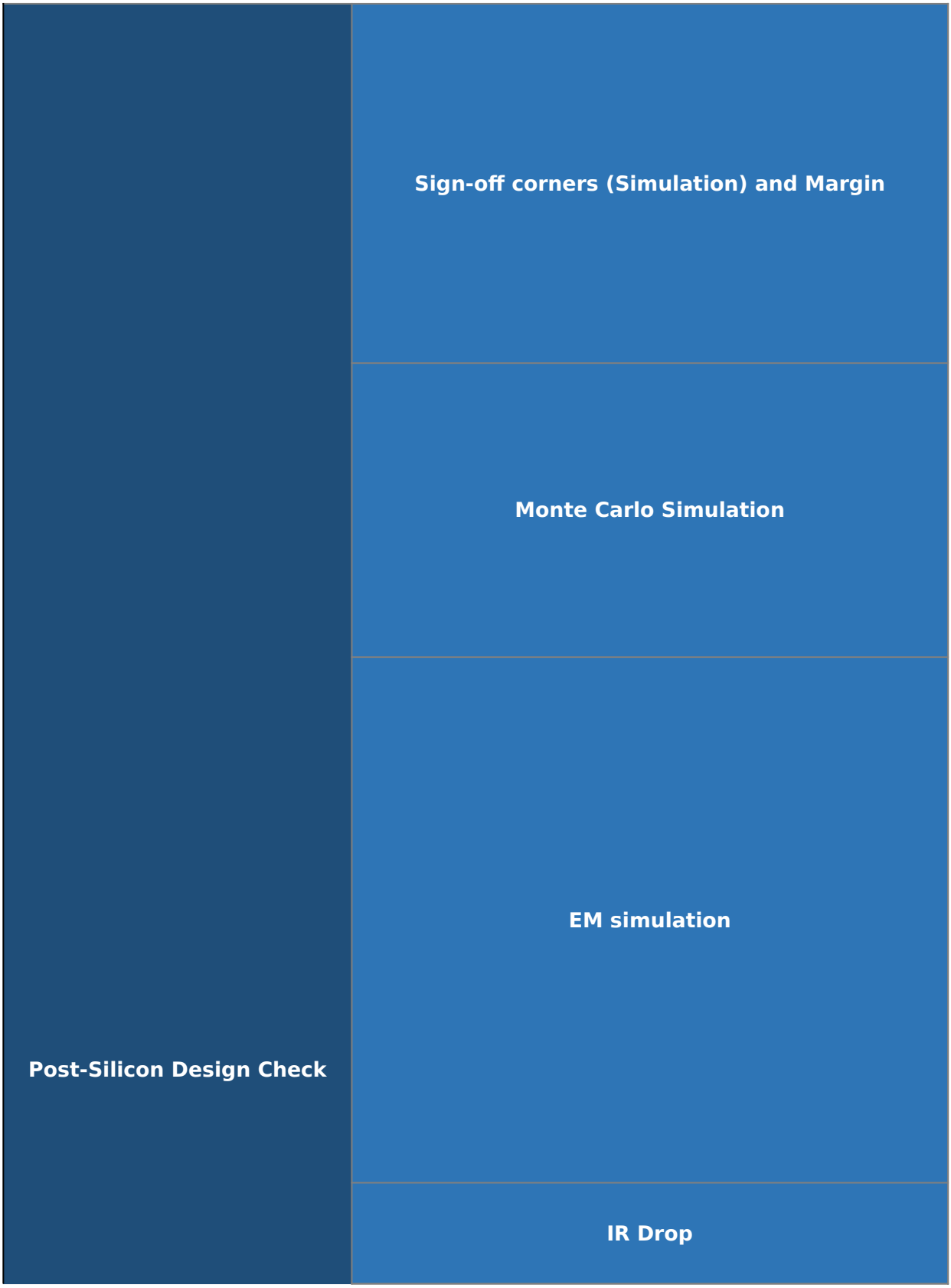
Post-Silicon Design Check
Sign-off corners (Simulation) and Margin
Monte Carlo Simulation
EM simulation
IR Drop

	Reliability Aging (HCI, NBTI, TDDB)
	Current density check (ESD)
	TOP level Simulation
DK(Deliverables) Check	Datasheet
	Userguide
	Integration Guide
	Test Plan
	CDL netlist
	GDSII/Oasis
	LEF
	LIB/DB
	Verilog netlist
	Verilog Behavioral Model
	Scan ATPG

	Test Bench
	IBIS model
	SPICE model for SI
	PI model
	RTL
	Consistency check (DK Quality check)
Silicon Test Review	Funtcion Test
	ESD/Latch-up Test
	Reliability Test (HTOL/HTS/etc)
	Compliance Test
	Automotive IP Requirements

EDA Tool Check	Analog Custom Design Flow
	Digital Design Flow

on

Detail
What is the process (node) used for development?
Please fill in the Sign-off PDK version.
Is it downloaded from www.samsungfoundry.com? (If not, fill in the source)
Is it downloaded from www.samsungfoundry.com?
Please fill in the IO cell DK version.
Is it downloaded from www.samsungfoundry.com?
Please fill in the standard cell DK version.
Did you layout it considering the gate poly direction?
Is there an original circuit DB of this IP? (Samsung process or 3rd party process)
What is the development phase of the original IP?
Is the technical standard applied to IP officially confirmed? Or is it an unconfirmed standard?
Is it developed to meet the specifications required by the target application?
What is the ISO26262 ASIL(automotive Safety Integrity Level) level?
Is an ISO26262 Safety Manual available in the released?
Is an ISO26262 FMEDA(Failure Modes, Effects and Diagnostic Analysis) report available in the released?
What kinds of ISO26262 work products do you support?
Does this IP support BIST such as loopback test for mass production?
Is it possible to at-speed test?
Does this IP support Boundary scan(JTAG) and TAP(Test access port) controller?
Is the IP validated in MPW test chip?
Has it ever been validated in any mass production?
Please describe how many products and how long have applied the IP.
Did you have a revision during the mass production?

What is the operating voltage and temperature guaranteed in the IP? (Refer to sign-off document)
Please provide the sign-off PVT(Process/Voltage/Temperature) corners of design and margin.
Did(do) perform the Monte Carlo simulation on major blocks(BGR, VCO, etc…)? Refer to Example conditions.
Describe the Monte Carlo simulation counting, method and condition or attach the files.
Did(Does) you achieve the timing closure of IP in all the sign-off corners and margin of the criteria presented by Samsung? (Please describe or attach the timing corners and margin in use)
Have all the timing check items for the final timing sign-off been completed and there is no violation? (If have, attach the violation report)
Has a custom digital cell been used on the IP? (If yes, please attach the timing check for Custom Digital Cells)
Has functionality and leakage current been checked for all power sequence scenario?
Has IP functionality been checked in integration level including power cell, breaker cell, and power management cell?
Have you completed the ESD network simulation? (Please attach the review report)
Did you use the esd device for purposes other than the esd protection circuit?
Does this IP use the ESD cell provided by Samsung (www.samsungfoundry.com)?
Is the bias check tech file downloaded from www.samsungfoundry.com?
Did(do) you use the latest version of bias check tech file? (Please fill in the actual usage version)
Has BIAS simulation been checked and no violations? (Please attach the review report)

Has Floating Gate simulation been checked and no violations? (Please attach the review report)
Has DC leakage path simulation been checked and no violations? (Please attach the review report)
Has Bulk check simulation been checked and no violations? (Please attach the review report)
Is the DRC rule deck downloaded from www.samsungfoundry.com? (If not, please download and re-perform)
Did(do) you use the latest version of DRC rule deck? (Please fill in the actual usage version)
Is DRC clean?
Please attach the switch options and result log.
Is the LVS rule deck downloaded from www.samsungfoundry.com? (If not, please download and re-perform)
Did(do) you use the latest version of LVS rule deck? (Please fill in the actual usage version)
Is LVS clean? (Please attach the switch options and result log)
Is ERC clean?
Please attach the result log.
Is the FLT rule deck downloaded from www.samsungfoundry.com? (If not, please download and re-perform)
Did(do) you use the latest version of FLT rule deck? (Please fill in the actual usage version)
Is FLT clean?
Is ANTENNA clean?
Please attach the result log.
Is the DFM rule deck downloaded from www.samsungfoundry.com?
Did(do) you use the latest version of DFM rule deck? (Please fill in the actual usage version)
Is DFM clean?
Please attach the switch options and result log.
Did you use custom layer? (not defined in the techfile/layermap)
Is there a case that used waive marking layer?

Please provide the sign-off PVT(Process/Voltage/Temperature) corners of design and margin.
Did(do) you perform the Monte Carlo simulation on major blocks(BGR, VCO, etc…)? Using post netlist?
Describe the Monte Carlo simulation counting, method and condition or attach the files.
Is the EM tech file downloaded from www.samsungfoundry.com?
Did(do) you use the latest version of EM tech file? (Please fill in the actual usage version)
Did you proceed EM check using the verification conditions and tech file suitable for the target application?
Has EM rule been checked based on layout and no violations? (Please attach the review report for each layer)
Does this IP meet the worst static IP Drop (VDD drop and VSS rise) value of the lower than Vtyp*3%?
Please fill in the design target and results.

Did you proceed aging check using the verification conditions and tech file suitable for the target application.
Has aging simulation been checked and is there any degradation? (Please attach the review report)
Is the aging tech file downloaded from www.samsungfoundry.com?
Did(do) you use the latest version of aging tech file? (Please fill in the actual usage version)
Have you completed the ESD network simulation? (Please attach the review report)
Did you perform the TOP level simulation using the post netlist?
Does the datasheet document provide all IP information such as IP feature, register map, pin description and block diagram?
Is there any special chapter for package/board guide available in the documented released?
Is an IP integration guide or any chapter for integration available in the document released?
Is a test plan (test items, how to test, related vector) for mass production available in the document released?
Is a CDL netlist of the macro provided?
Is a GDSII or Oasis stream layer mapping file provided?
Is a LEF description of the macro provided?
Is a timing views and capacitance information(LIB/DB) for each pins of the macro provided?
Is a Verilog netlist for back annotation and ATPG simulation of the macro provided?
Is a behavioral verilog model of the macro provided?
Is ATPG scripts includes CTL model of the macro provided?

Are a testbench (file containing simulation conditions) and examples (simulation input file) for IP operation and test simulation provided?
Is a IBIS(or IBIS-AMI) model provided?
Is a SPICE model for SI provided?
Is a model for PI simulation provided?
Is the IP composed of soft macro of RTL as well as hard macro?
Is there any means to verify the completeness of the deliverables?
Is the consistency among DKs checked and no issues? (Please attach the report)
How many samples per corner were used in silicon test and how the samples were chosen?
What is the voltage and temperature condition of the test?
Is the silicon report available? (Please attach the silicon test report)
Is there any failure items(DC parameter, AC Parameter… etc) in silicon test? (If yes, please describe the items, results and final decision of acceptance)
Has voltage margin (HVCC, LVCC) of the IP been verified through silicon test? (If yes, please attach the HVCC, LVCC margin)
Has temperature margin(HT, LT) of the IP been verified through silicon test? (If yes, please attach the HT, LT margin)
Has ESD(HBM/CDM), Latch-up of the IP been verified through silicon test?
Has ESD(HBM/CDM) upper level test of the IP been verified through silicon test? (If yes, please attach the upper level)
Has Reliability(HTOL/HTS/etc) of the IP been verified through silicon test and it found no failure?
Has the IP been verified and documented for plug and play interoperability according to the specifications?
Did you pass the AEC-Q100 HTOL(High Temp. Operating Life) test?
What is the acceleration condition of the test?

Did you pass the AEC-Q100 ELFR(Early Life Failure Rate) test?
Please provide(attach) the analog design flow(process) in the IP.
Please provide(attach) the degital design flow(process) in the IP.

- **Customer:**
- **IP Name:**
- **Process:**

Criteria
-
ex) LN14LPPS00-v1.2.3.4(CDS/IPDK version)
-
-
-
-
-
-
-
-
Confirmed: HDMI V2.1 Unconfirmed: C-PHY 2.0, D-PHY V2.5
Temp -. Commercial: 0 C -. Industrial: -40 ~ 100 C -. Automotive G2: -40 ~ 125 C -. Military: -55 ~ 125 C
ASIL A,B,C,D
-
-
-
-
-
-
-
-
-
-
-

Voltage range: Vtyp+/-5% Temperature -. Commercial: 0 ~ 85 C -. Industrial : -40 ~ 100 C Automotive G2: -40 ~ 125 C Military: -55 ~ 125 C
Voltage range: Vtyp+/-10% Temperature -. Commercial: 0 ~ 105 C (Guarantee: 0 ~ 85C) -. Industrial : -55 ~ 125 C (Guarantee: -40 ~ 100C) Automotive G2: -55 ~ 150 C (Guarantee: -40 ~ 125C) Military: -70 ~ 150 C (Guarantee: -55 ~ 125C) Corner: TT,FF,SS,SFE,FSE Resistor, Cap, Vpnp: min/max
Sigma: 3.5 Sigma(Default) Corner: Global monte(Monte ~ mandatory) Local monte(SS/FF/SFE/FSE - Recommend) Voltage: min, max Temp: -55, 125 C #of iterations: 200times (function check) 1000 times(critical circult - start up circuit of BGR)
-
-
-
EDA tool based or SPICE simulation based or Function based(No timing check)
-
-
Samsung standard: PERC(based on netlist)
Do not use without confirmation of Samsung ESD repreentative.
-
-
-
-

-
-
-
-
-
-
-
-
-
-
-
-
-
-
-
-
-
-
-
-
-
-
-

Voltage range: Vtyp+/-10% Temperature -. Commercial: 0 ~ 105 C (Guarantee: 0 ~ 85C) -. Industrial : -55 ~ 125 C (Guarantee: -40 ~ 100C) Automotive G2: -55 ~ 150 C (Guarantee: -40 ~ 125C) Military: -70 ~ 150 C (Guarantee: -55 ~ 125C) Corner: TT,FF,SS,SF,FS Resistor, Cap, Vpnp: min/max PEX: TT,SF,FS : RCnom FF: Cmin, RCmin SS: Cmax, RCmax
-
Sigma: 3.5 Sigma(Default) Corner: Global monte(Monte ~ mandatory) Local monte(SS/FF/SFE/FSE - Recommend) Voltage: min, max Temp: -55, 125 C PEX: Rcnom #of interations: 200 times (function check)
-
-
Conditions Base: 10y, 100 C Mobile: 5y, 90 C (10nm) Network: 10y, 105.6 C Auto: G2: 3y, 125 C Auto: G1: 3y, 150 C Tech file: using tech files by target application ** when developing high speed of high than 6Ghz speed, can be used the AUTO G1 relax rule that applies life time for 2years
-
-
-

ase, Mobile,Network: 10y, 125 C Auto G2: 3y, 125 C Auto G1: 3y, 150 C Tech file: using tech files by target application Base, Mobile, Network → Base(Mobile, Network cover) Auto G1/G2 → Auto
ex) Spec: SNDR ≥ 60dB Fresh simulation result: 66dB (w/ waveform) Degradation simulation result: 64.5dB (w/ waveform)
-
-
Samsung standard: EOS(based on layout, use Apache tool
Voltage range: Vtyp+/-10% Temperature -. Commercial: 0 ~ 105 C (Guarantee: 0 ~ 85C) -. Industrial : -55 ~ 125 C (Guarantee: -40 ~ 100C) Automotive G2: -55 ~ 150 C (Guarantee: -40 ~ 125C) Military: -70 ~ 150 C (Guarantee: -55 ~ 125C) Corner: TT,FF,SS,SF,FS Resistor, Cap, Vpnp: min/max PEX: TT,SF,FS : RCnom FF: Cmin, RCmin SS: Cmax, RCmax
-
-
-
-
-
-
-
For a standard cell, includes NLDM, NLPM, CCST and LVF
-
-
-

Softmacro Case [Module_name].v/vg/폐
-
-
CPM or PWL or others
-
-
-
-
-
-
-
SS corner sample 100ea -. (100ea recommendation, 50ea mandatory) HVCC: Vtype+15%(design target Vtype+10%) LVCC: Vtyp-15% (design target Vtyp-10%)
SS corner sample 100ea -. (100ea recommendation, 50ea mandatory) Hot temp: 140 C (design target 125 C) Low temp: -55 C (design target -40 C)
-
-
-
-
77 Sample / 3 lots Grade 1: T=125C, 1000hr, Vcc max operating for both DC/AC parameter FT Check before and after at low, and high temp. Should do Cycling test before HTOL for flash/fusion. Accept criteria: 0 Fail. Grade 2: T=105C, 1000hrs, Vcc max operating for both DC/AC parameter FT Check before and after at low, and high temp. Should do Cycling test before HTOL for flash/fusion. Accept criteria: 0 Fail.
-

800 Sample / 3 lots Grade 1: T=125C, 48hr, Vcc max operating for both DC/AC parameter FT Check before and after at low, and high temp. Accept criteria: 0 Fail. Grade 2: T=120C, 48hr, Vcc max operating for both DC/AC parameter FT Check before and after at low, and high temp. Accept criteria: 0 Fail.
-
-

Answer

	Number
Done(OK)	0
Not-yet	109
Not Applicable(N.A)	0
TBD	0
Total Bench Pass Rate	0/109

Comment	Checker

Percentage
0%
100%
0%
0%
0%
Check
Not-yet
Not-yet
Not-yet
Not-yet
Not-yet
Not-yet
Not-yet
Not-yet
Not-yet
Not-yet
Not-yet
Not-yet
Not-yet
Not-yet
Not-yet
Not-yet
Not-yet
Not-yet
Not-yet
Not-yet
Not-yet
Not-yet
Not-yet

Not-yet
Not-yet
Not-yet
Not-yet
Not-yet
Not-yet
Not-yet
Not-yet
Not-yet
Not-yet
Not-yet
Not-yet
Not-yet
Not-yet

Not-yet
Not-yet
Not-yet
Not-yet
Not-yet
Not-yet
Not-yet
Not-yet
Not-yet
Not-yet
Not-yet
Not-yet
Not-yet
Not-yet
Not-yet
Not-yet
Not-yet
Not-yet
Not-yet
Not-yet
Not-yet
Not-yet
Not-yet

Not-yet

Not-yet

Not-yet

Not-yet

Not-yet

Not-yet

Not-yet

Not-yet

Not-yet

Not-yet
Not-yet
Not-yet
Not-yet
Not-yet
Not-yet
Not-yet
Not-yet
Not-yet
Not-yet
Not-yet
Not-yet
Not-yet
Not-yet
Not-yet
Not-yet
Not-yet

Not-yet
Not-yet
Not-yet
Not-yet
Not-yet
Not-yet
Not-yet
Not-yet
Not-yet
Not-yet
Not-yet
Not-yet
Not-yet
Not-yet
Not-yet
Not-yet
Not-yet
Not-yet
Not-yet

Not-yet

Not-yet

Not-yet

0.2 Changing summ

Category	Sub Category
1. PLL	1.PFD & Charge Pump
	2.Loop Filter
	3.Dividers
	4.VCO
	5.DCC
	6.AFC
	7. Fractional-N
	8.PLL_TOP
2. CDK	1.BIAS
	2.RCAL
	3.Level Shifter
	4.Primitive
3.SERDES	1.Serializer
	2.Deserializer
4.Tx	1. Driver

nary

Modification description

- **Customer:**
- **IP Name:**
- **Process:**

Reason & Purpose	Risk

Designer Name	Reviewer	Reviewer Comment

Details

1 Kick-Off

Category	Sub Category
	1. Designer
	2.Milestone
	3.Architecture
	4.PLM/IMS Information

Kick-off	5.MPW Test Chip
	6.IP Spec
	7.Block/Timing Diagram
	8.IO
	9.Floorplan

	10.DIPD Design Rules - For each designer, record the date that this rule was read in the Details column.

	11.FBR

Item	No
1. PHY_ANALOG_OWNER	**1.1**
2. PHY_DIGITAL_OWNER	**1.2**
1. IP_SCHEDULE	**2.1**
3. PHY_ANALOG_DELIVERABLES_SCHEDULE	**2.2**
1. ARCHITECTURE_CHANGE_NOTICE	**3.1**
1. PLM_PROJECT_CODE	**4.1**
2. PRODUCT_INFO_FBR	**4.2**
3, IPQ_REQUEST	**4.3**
1. MPW_MODULE	**5.1**
2. MPW_TEST_CHIP_DESIGNER	**5.2**
3. MPW_TEST_CHIP_ BONDING_TYPE	**5.3**
4. MPW_TEST_CHIP_BOARD	**5.4**
5. FGPA_TEST_WITH_MPW_TEST_CHIP	**5.5**

6. VSS_MERGE_IN_PACKAGE	**5.6**
7. 28nm_APD_X_Y_SHRINK	**5.7**
8. Solder_Bump_MPW_TEST_CHIP	5.8
1. PPA(Power/Performance/Area)	**6.1**
2. IP_SPEC	**6.2**
1. PHY_BLOCK_DIAGRAM	**7.1**
2. IO_PLACEMENT	**7.2**
3. ANALOG_DIGITAL_INTERFACE_TIMING_D	**7.3**
1. SPECIAL_HIGH_SPEED_IO_PAD	**8.1**
2. TEST_CHIP_IO	**8.2**
1. LAYOUT_FLOORPLAN	**9.1**
2. BUMP_FLOORPLAN	**9.2**
1. POST_SIM_WITH_RC_EXT	**10.1**

2. LANES_SIM_ALL	**10.2**
3. VERILOG_MODEL_EXTRACTION	**10.3**
4. SYNCHRONOUS_RESET	**10.4**
5. MONTE_CARLO_SIM_CONDITION	**10.5**
6. TRANSMISSION_GATE	**10.6**
7. COMPLEMTARY_LOGIC_WITH_COMPLEME	**10.7**
8. SIGN_OFF_CONDITION	**10.8**
9. Verilog Current Aware Model	**10.9**
1. FBR_DOCUMENT	**11.1**

2. SOC_SCENARIO_SIMULATION	**11.2**
3. MAIL_PRONE_SPEC	**11.3**
4. SPEC_WAIVE	**11.4**

■ **Customer:**

■ **IP Name:**

■ **Process:**

Check Point
Who is the person in charge of PHY analog TOP and sub block?
Who is the person in charge of PHY digital and MPW test chip?
Attach IP development milestone schedule and notify QA before Kick Off meeting. - Write DR schedule, test chip progress schedule, IP deliverables schedule, test vector delivery schedule, ATE schedule, Bench schedule in the Details column.
Specify deliverables to be exchanged between PHY analogue and digital person in charge and record the schedule for it in the Details column.
Check if PHY overlap is the same as existing or if there is a newly added part. If there is a changed or newly added block in the existing structure, review it in kick-off.
Check the function project registration in PLM. And check the schedule management that should be linked to the preceding project (MPW project or product project). - Specify the name of the preceding task and function project code and indicate the schedule for each step.
What product is this PHY going to be used in? And have it done the consultation about PHY spec with the product manager? (Please specify the product name and the person in charge of the product, and attach FBR.)
Check the IPQ request from MPW (inside DIPD) or product representative. (The IPQ number should be indicated in the Details column.)
If this PHY is a test chip in the MPW, the MPW name, PG schedule, number of modules, module size, etc., are writed in the Details column.
If it is MPW, who will do test chip design and integration work? If outsourcing does integration, wirte about contract, SOW writing schedule.
Wirte the bonding type of MPW test chip. (flip-chip or wire-bonding)
Write about test board whether to use the existing or create a new one. If it is new one, write the name of board designer and schedule of board production.
1) Write the max byte clock frequency of the FPGA in the Details column. MPW test chip should be designed to test with FPGA. To this end, the byte clock frequency must be less than 250 MHz. 2) Wirte the MAX operation frequency in the Details column. If a higher byte clock(more than 250MHz) is needed to satisfy the total BW, the bit width of the data bus should be increased. (ex. 250MHz 16bit for PCIe Gen2, 250MHz 32bit for PCIe Gen3).

The ground of IP and testchip should be separated by bump, and ground should be merged in PKG. When producing a Testchip package, you must guide the package team.
In the case of 28nm MPW, attention is required when delivering APD file for package operation. Since the actual size and coordinates are 90% smaller than the GDS, 28nm must be converted from the coordinates extracted from the GDS to the real coordinates. To check this, get the size / coordinates before / after the reduction of AIF / APD coordinates from the layout person and cross check. (After the GDS is transmitted, cross check with the X and Y coordinate list of the pump extracted from the actual shrink DB at the DP (data preparation) stage.)
Check that testchip bump is designed as solder bump (it must be solder bump for auto verification) copper pillar can be tested up to 105℃, but solder bump can be tested up to 125℃ for EDS. For auto g1, good chip sorted for EDS passed @ 125℃ and that should be PKG qual @ 150℃.
Write the expected PPA value of IP. - Target PPA, previous node PPA is required. Recommendation including competitor PPA
Attach a spec table that the IP must satisfy with each protocol base. (TJ, RJ, Tr / Tf, SSC frequency, amplitude range, prevalence level, jitter value, etc.) It have to be checked by simulation or ATE or bench test.
Attach the PHY block diagram (PLL, BIAS, TX, RX level) that contains the main signal path between each block using VISIO tool.
Attach the figure about layout of high speed I/O and power in PHY.
Attach the name and timing diagram of the interface between the PHY analog and the digital.
If it is a new process, HSIO, which reduces ESD capacity, should be requested to ESD team. Write the date to receive a special HSIO from ESD team. Also, request special IO such as HDMI's Open Opening IO.
Check the person in charge of GPIO and SSTL for testchip and record the expected date to be obtained in Details column.
Attach the layout floorplan. 1) It must be written with VISIO, 2) draw at specific block levels (PFD, CP, VCO, divider, serializer, driver, CTLE, DFE, CDR, etc.), 3) determine the width/length of each block, 4) and determine the size of the entire IP.
Attach the Bump floorplan according to the position of IO. Write the size and pitch of the bump in the Details column.
When performing Post-simulation except TOP-sim, be sure to extract all 'RC'. As you go into fine processes, the difference between 'C only' and 'RC' is “ very ” large. (When simulating a driver in some IP, there is a case that ISI occurs in a chip because RC extraction is not performed.)

Even if all lanes constituting the IP are composed of the same block, it is necessary to check the function verification for all the blocks at the IP TOP level. - There was some iusse that lane 0, 1 was OK but lane 2, 3 didn't work. I thought each lane was same, but there was a different part, and I missed it and did not simulate about TOP-sim.
The verilog model must be extracted from the circuit in ADE. And you should describe and control the verilog model with the functional view in the library manager. Final TOP verilog model should be extracted from the ADE and the script is turned to complete the final version. In this process, manual modification work must be prohibitied.
When the reset is released, it is released synchronously to the operating clock, and when it reset, it is async regardless of the timing of the clock. (For example, There are three FFs in the divider below figure. If the reset is not released synchronously, some FF operates on this clock and some FF operates on the next clock and can go to a state that is not desired. In addition, if you want to synchronize to the clock when reset, if the clock disappears, it will not be reset.) See the above figure 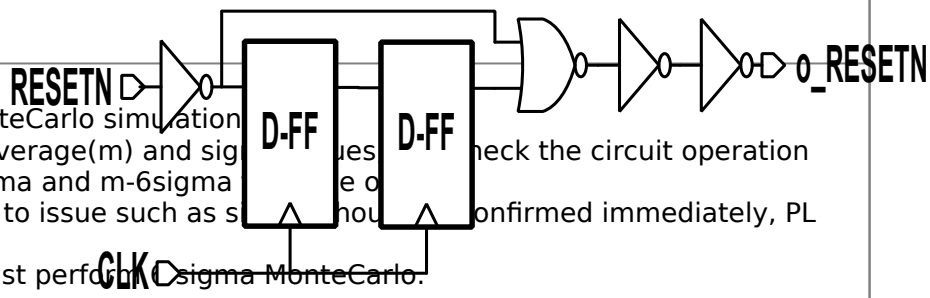
Design / verify at 6sigma level in MonteCarlo simulation - For 6sigma simulation, obtain the average(m) and sig ues heck the circuit operation after applying the values of m + 6sigma and m-6sigma e o - If 6sigma level verification fails due to issue such as s hou onfirmed immediately, PL and QA. - All blocks that distribute current must perfo sigma MonteCarlo. (Check items in 4_Block_sim tab)
The transmisson gate for passing the voltage of the thin Tr domain must use thick Tr. If you configure the transmission gate using thin Tr, if the voltage on both sides of the transmission gate is close to half VDD, both NMOS and PMOS of the transmission gate may fail to deliver the voltage. The transmission gate for turning on / off the current source also must use thich tr.
If you use complementary FF, make sure that the CK, CKB maintains the complementary property well through a sufficient complementary inverter. If skew occurs between CLKP and CLKN and this skew becomes smaller than C-to-Q delay of latch, there will be an error in FF operation.
Make sure that you read the linked sign-off condition in the Details column.
Add and check the "Current Aware Model" in verilog model of each block.
Attach or link the FBR (FeedBack Request) sheet created in consultation with the customer.

If customers other than S.LSI proceed with chip design, we should share all SOC level operation scenarios related to HSI IP operation. And we should proceed simulation / share dump about that. Write that requirements to the customer in FBR. (If it is described, mark O if there is no X)
After released FBR, If there is a requested / agreed spec through mail, CC, etc., without being reflected in FBR, attach this spec list and attach the mail mentioned. (If you do not have this spec : NA, If you attach list and file : O, If you don't have confirm mail : X)
It is a spec requested by the standard, but if there is a waived spec to the customer because it can not be satisfied due to the characteristic of the project, describe it and attach a waive confirm mail. (If you do not have this spec : NA, If you attach list and file : O, If you don't have confirm mail : X)

Designer Name	Reviewer

0_RESETN

	Number
완료 (OK)	0
미진행	38
해당사항없음	0
불충분	0
진행중	0
완료율 (%)	0/38

Reviewer Comment	Check
	미진행
	미진행
	미진행
	미진행
	미진행
	미진행
	미진행
	미진행
	미진행
	미진행
	미진행
	미진행
	미진행

	미진행
	미진행
	미진행
	미진행
	미진행
	미진행
	미진행
	미진행
	미진행
	미진행
	미진행
	미진행
	미진행

	미진행
	미진행
	미진행
	미진행
	미진행
	미진행
	미진행
	미진행
	미진행

	미진행
	미진행
	미진행

Percentage
0%
100%
0%
0%
0%
0%

Details

2 Clock, Power &

Category	Sub Category
CPR review	1. Digital Top
	2. Analog Top

& Reset

Item	No
1. DATASHEET	**1.1**
2. VERILOG_POWER_SEQUENCE	**1.2**
3. DISABLE_CONTROL_DOMAIN	**1.3**
4. CLOCK_PATH_REVIEW	**1.4**
5. ASYNC_CLOCK_DOMAIN_CROSSING	**1.5**
6. ETC	**1.6**
1. CLOCK_PATH_REVIEW	**2.1**
2. RESET_DOMAIN	**2.2**

3. ASYNC_CLOCK_DOMAIN_CROSSING	**2.3**
4. ETC	**2.4**

- **Customer:**
- **IP Name:**
- **Process:**

Check Point
Review the CPR technology contents of the data sheet Replug the STA guide in the datasheet. Since there is no internal clock structure in the datasheet, check if the internal clock and the input / output clock that require authorization are written according to the design.
At Verilog simulaiton, power up sequence review Whether the power sequence specified in the datasheet is abnormal or not is reviewed together. In addition, check whether to insert the checker in the PHY verilog model and check whether it works the same as the datasheet.
Block technology controlled by power down mode The sub-block's technology controlled by power mode is specified in the design note. The sub blocks for each power mode specified in the Spec or datasheet are reviewed together whether the reset or PD is properly controlled.
Review clock path such as creation, muxing, distribution (in PMD layer) First, review the clock structure specified in the design note. In particular, if you need to change the clock MUX for each gen1 / 2 / 3, check whether glitch-free MUX is used, and if static, it is learned that the gen _ clock is declared normal in the SDC.
Check Aync clock domain leakage List up all the points where the clock domain meets Async and check if proper clock domain crossing is performed.
All other CPR related materials
Review clock path such as creation, muxing, distribution (in PMA layer) List up the internal clock paths of PMA (e.g. PLL to CD to Tx, PLL to CD to Rx) main clock path, 1) basic function including added mux selection, 2) Check the default value and operation status of power down status. For power state mode, review it together by combining / digital eng'r sync.
Check the connection status for all resettable blocks Check if all blocks that are interoperating with the reset signal inside the PMA are listed up and matched with the intended function at reset / digital eng'r sync. Separately, there is a case that needs a reset, but the corresponding block level should review whether there are any missing parts.

Check Aync clock domain leakage List up all the points where the clock domain meets Async and check if proper clock domain crossing is performed.
All other CPR related materials

Designer Name	Reviewer

	Number
완료 (OK)	0
미진행	10
해당사항없음	0
불충분	0
진행중	0
완료율 (%)	0/10

Reviewer Comment	Check
	미진행
	미진행
	미진행
	미진행
	미진행
	미진행
	미진행
	미진행

	미진행
	미진행

Percentage
0%
100%
0%
0%
0%
0%
Details

3 Block simu

Category	Sub Category
	1.PFD & Charge Pump
	2.Loop Filter

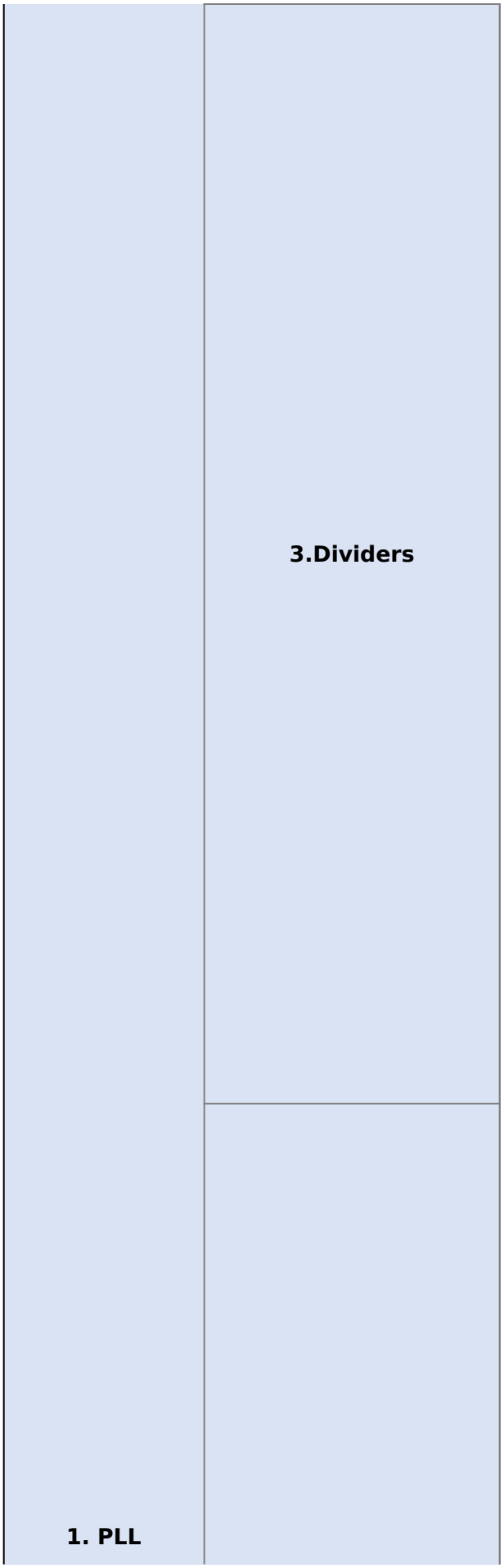
3.Dividers
1. PLL

	4. VCO
	5.DCC
	6.AFC
	7. Fractional-N

8.PLL_TOP

1.BIAS

2.CDK

2. RCAL
3. Level Shifter
4. Primitive

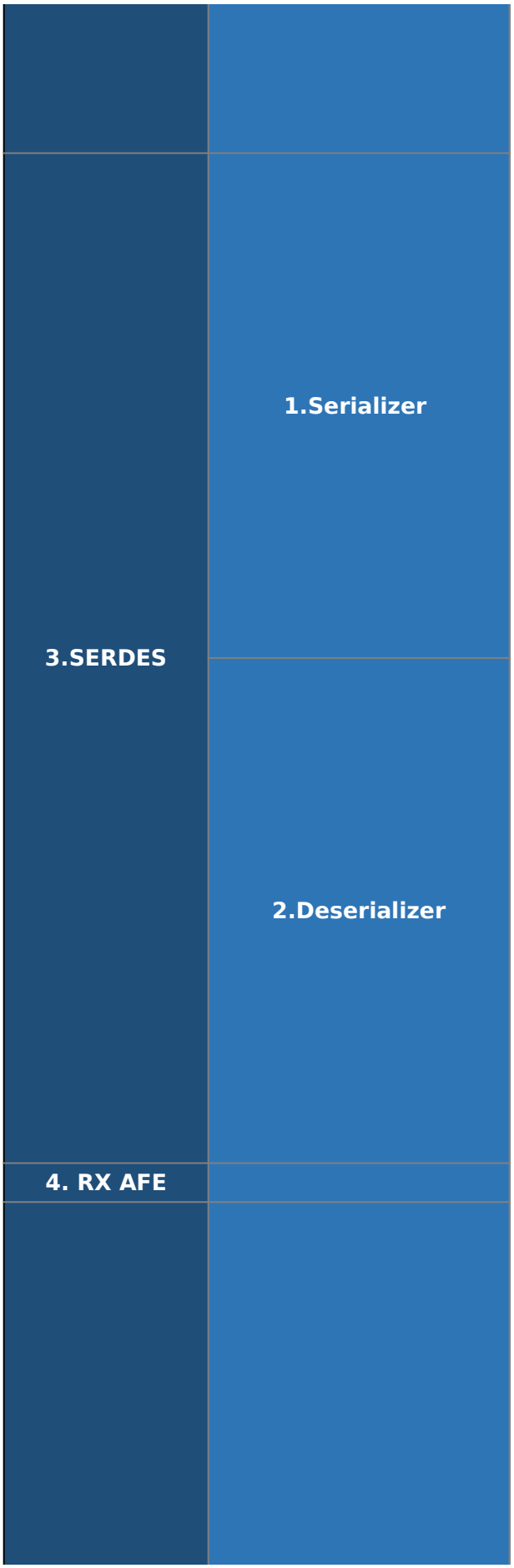
1.Serializer
3.SERDES
2.Deserializer
4. RX AFE

1. Driver

5.TX

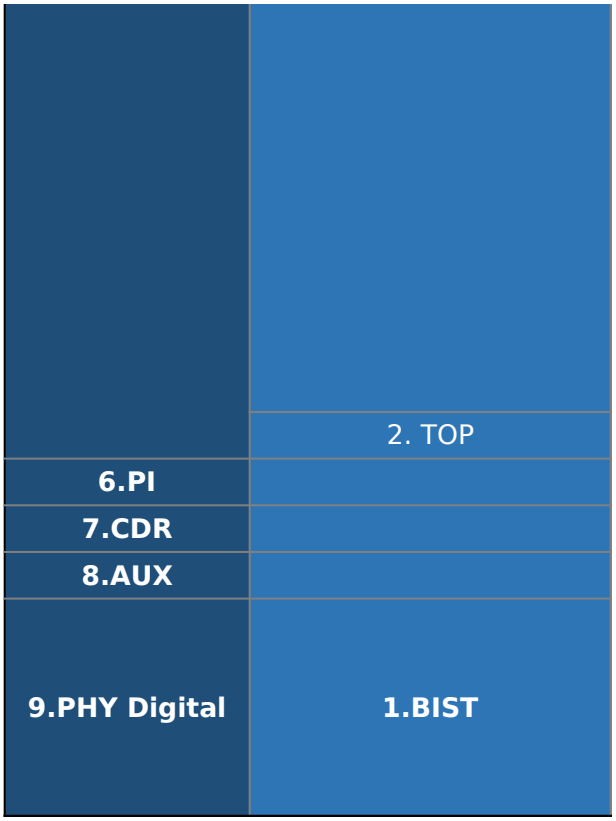
2. TOP
6.PI
7.CDR
8.AUX
9.PHY Digital
1.BIST

lation & check list

Item	No
1. PFD_CPP_LINEARITY_AND_DEAD_ZONE	**1.1.1**
2. PFD_CPI_LINEARITY_AND_DEAD_ZONE	**1.1.2**
3. PFD_RESET_PULSE_WIDTH	**1.1.3**
4. CPP_MISMATCH	**1.1.4**
5. CPI_MISMATCH	**1.1.5**
6. CP_TRAN	**1.1.6**
7. PFD_INPUT_FREQ_MIN_RANGE	**1.1.7**
8. UNITY_GAIN_BUFFER_BW	**1.1.8**
9. CP_PSRR	**1.1.9**
10. CP_PHASE_NOISE	**1.1.10**
C1. CPI_RANGE	**1.1.C1**
C2. CPP_RANGE	**1.1.C2**
C3. CP_MISMATCH_CONTROLLABILITY_RANGE	**1.1.C3**
T1. CP_CURRENT_MON	**1.1.T1**
1. DUAL_PATH_UNITY_GAIN_BUFFER_BW	**1.2.1**
2. CAP_DEFAULT_VALUE_VS_VCTRL	**1.2.2**
C1. LF_CAP_RANGE	**1.2.C1**
C2. LF_R_RANGE	**1.2.C2**
C3. DUAL_PATH_UNITY_GAIN_BUFFER_SINK_CURRENT	**1.2.C3**

1. DUALUS_PRE_SCALER_TIMING	**1.3.1**
2. POST_DIVIDER_MIN_MAX_FREQ_WITH_VCO	**1.3.2**
3. MAIN_DIVIDER_MIN_MAX_FREQ_WITH_VCO	**1.3.3**
4. PRE_DIVIDER_MAX_FREQ	**1.3.4**
5. DIVIDER_TSPC_MIN_FREQ	**1.3.5**
6. IQ_DIVIDER_LVCC	**1.3.6**
7. HIGH_SPEED_DIVIDER_MARGIN	**1.3.7**
8. COMPLEMENTARY_RESET_FOR_HIGH_SPEED_DIVIDER	**1.3.8**
C1. PRE_DIVIDER_CONTROLLABILITY	**1.3.C1**
C1. MAIN_DIVIDER_CONTROLLABILITY	**1.3.C2**
C3. POST_DIVIDER_CONTROLLABILITY	**1.3.C3**
1. VCO_FREQ_RANGE	**1.4.1**
2. VCO_FREQ_GAIN	**1.4.2**
3. VCO_PHASE_NOISE	**1.4.3**
4. VCO_VREG_AMP_PSRR	**1.4.4**
5. VCO_VREG_AMP_BW_AND_STABILITY	**1.4.5**

6. VCO_VREG_AMP_BIAS_PHASE_NOISE	**1.4.6**
7. VCO_NOISE_SUMMARY	**1.4.7**
8. VCO_START_UP	**1.4.8**
9. VCO_PDOWN	**1.4.9**
C1. VREG_AMP_CURRENT_CONTROLLABILITY	**1.4.C1**
T2. VCTRL_MON	**1.4.T2**
1. DCC_FREQUENCY_RANGE_WITH_VCO	**1.5.1**
2. DCC_DUTY_VALUE	**1.5.2**
3. DCC_WITH_SMALL_INPUT	**1.5.3**
1. AFC_DIGITAL	**1.6.1**
2. AFC_BAND_SETTLING_TIME	**1.6.2**
3. AFC_COUNTER_MAX_FREQ_WITH_VCO	**1.6.3**
4. AFC_SCAN_START_POINT	**1.6.4**
5. AFC_START_AT_PREVIOUSLY_FOUND_CODE	**1.6.5**
C1. AFC_SCAN_START_POINT	**1.6.C1**
C2. AFC_BAND_SIZE	**1.6.C2**
C3. AFC_VCTRL_RANGE	**1.6.C3**
1. SIGMA_DELTA_OPERATION	**1.7.1**
2. PHASE_BLENDER	**1.7.2**
1. PLL_TOP_STABLITY	**1.8.1**

2. PLL_TOP_TRAN	**1.8.2**
3. PLL_TOP_NOISE_ANALYSIS	**1.8.3**
4. PLL_REFERENCE_CLOCK_JITTER	**1.8.4**
5. PLL_OUTPUT_AND_DIV_OUTPUT_CLOCK	**1.8.5**
6. NO_ON_THE_FLY_ASYNC_SWITCHING	**1.8.6**
7. DCC_DIVIDER_SEQUENCE	**1.8.7**
8. PLL_TOP_PD_CURRENT	**1.8.8**
9. PLL_TOP_STARTUP	**1.8.9**
10. PLL_REAL_MODEL_VERILOG_SIM	**1.8.10**
1. BIAS_BGR_TEMP_FC	**2.1.1**
2. BIAS_BGR_TEMP_MONTE	**2.1.2**
3. BIAS_BGR_STARTUP_FC	**2.1.3**
4. BIAS_BGR_STARTUP_MONTE	**2.1.4**
5. BIAS_CURRENT_TEMP_FC	**2.1.5**

6. BIAS_CURRENT_TEMP_MONTE	**2.1.6**
7. BIAS_BGR_SETTLING_TIME	**2.1.7**
8. BGR_POWER_CONTROL	**2.1.8**
9. BGR_MAX_RANGE	**2.1.9**
10. BGR_OUT_PSRR	**2.1.10**
11. RESISTOR_LADDER_BIAS	**2.1.11**
12. CURRENT_MIRROR_SAT_CHECK	**2.1.12**
13. BGR_FAST_SETTLE_DOWN	**2.1.13**
14.. BGR_VDROP	**2.1.14**
C1. BGR_OUT_CONTROLLABILITY	**2.1.C1**
C2. RESISTOR_LADDER_BIAS	**2.1.C2**
C3. RPOLY_MASTER_CURRENT_RANGE	**2.1.C3**
C4. REXT_MASTER_CURRENT_RANGE	**2.1.C4**
C5. BGR_LOCATION	**2.1.C5**
T2. CURRENT_OUTPUT_MON	**2.1.T2**
1. RCAL_OPERATION	**2.2.1**
2. RCAL_OPERATION_MONTE	**2.2.2**

3. RCAL_SWITCH_MOS_SIZING	**2.2.3**
C1. RCAL_RESOLUTION	**2.2.C1**
C2. RCAL_OFFSET_CONTROL	**2.2.C2**
C3. RCAL_PN_CONTROL	**2.2.C3**
1. LEVEL_SHIFTER_VDD_VDDH_SIM	**2.3.1**
2. LEVEL_SHIFTER_VDD_VDDH_SIM_MC	**2.3.2**
3. LEVEL_SHIFTER_POWER_DOWN	**2.3.3**
1. INV_NAND_NOR	**2.4.1**
2. TBUF	**2.4.2**
3. TBUF_DISABLE	**2.4.3**
4. MUX	**2.4.4**
5. CKS2D	**2.4.5**
6. DFF	**2.4.6**
7. TSPC	**2.4.7**

8. DIV	**2.4.8**
9. CAP	**2.4.9**
10. Transmission gate (Switch)	**2.4.10**
1.SERIALIZER_TIMING	**3.1.1**
2.SERIALIZER_BER_TEST	**3.1.2**
3.SERIALIZER_BACK_TO_BACK_FF	**3.1.3**
T1.INTERNAL_LOOP_BACK	**3.1.T1**
T2.DIV10_PHASE_CONTROL	**3.1.T2**
1.FIRST_SAMPLER_OFFSET	**3.2.1**
2.DESERIALIER_TIMING	**3.2.2**
3.DESERIALIZER_BER_TEST	**3.2.3**
T1.BYTECLK_PHASE_CONTROL	**3.2.T1**
1. DRVR_OUTPUT_AMP	**5.1.1**
2. DRVR_PRE_EMPH	**5.1.2**

3. DRVR_TRF	**5.1.3**
4. DRVR_OUTPUT_JITTER	**5.1.4**
5. DRVR_PREDRVR_JITTER	**5.1.5**
6. DRVR_PREDRVR_BW	**5.1.6**
7. DRVR_JITTER_WITH_PACKAGE_AND_CHANNEL_MODEL	**5.1.7**
8. DRVR_JITTER_EQ	**5.1.8**
9. VOLTAGE_MODE_DRVR_SELF_JITTER	**5.1.9**
10. DRVR_EMP_PCIeGEN3/4	**5.1.10**
11. DRVR_LF_AMP	**5.1.11**
12. DRVR_AC_VCM	**5.1.12**
13. DRVR_DC_VCM_DIFF	**5.1.13**

14. EI entry time	**5.1.14**
15. EI exit time	**5.1.15**
16. DRVR_RX_DETECT	**5.1.16**
17. TX_RL	**5.1.17**
18. TX_BIFURCATION	**5.1.18**
19. TX_ACDRV	**5.1.19**
20. TX_ACDRV_DISABLE_EI	**5.1.20**
21. TX_RCAL_OPERATION	**5.1.21**
22. TX_RCAL_OPERATION_MONTE	**5.1.22**
23. TX_RCAL_SWITCH_MOS_SIZING	**5.1.23**
C1. DRIVER_OUTPUT_RANGE	**5.1.C1**

C2.PRE_EMPHASIS_RANGE	**5.1.C2**
T1.VREG_DRVR_MON	**5.1.T1**
C4. TX_RCAL_RESOLUTION	**5.1.C4**
C5. TX_RCAL_OFFSET_CONTROL	**5.1.C5**
C6. TX_RCAL_PN_CONTROL	**5.1.C6**
1. TX_SER_PM	**5.2.1**
1. BIST_PATTERN	**9.1.1**
2. BIST_ITSELF_FAIL_CHECK	**9.1.2**
3.CDC_CHECK	**9.1.3**

- **Customer:**
- **IP Name:**
- **Process:**

Check Point
Check the linearity of the output charge when the phase difference between the two inputs of PFD changes f 180 degree in 'PFD + CP'. Perform for the CPP (horizontal axis: phase, vertical axis: charge amount).
Check the linearity of the output charge when the phase difference between the two inputs of PFD changes f 180 degree in 'PFD + CP'. Perform for the CPI (horizontal axis: phase, vertical axis: charge amount).
Check the PFD reset path delay while PLL is locked. The pulse width should be long enough not to make 'dea (Transient simulation)
Check the CPP current mismatch between UP and DN. Run the simulation with all the swiches of CP are on. (horizontal axis: CPOUT voltage, vertical axis: UP, DN current.)
Check the CPI current mismatch between UP and DN. Run the simulation with all the swiches of CP are on. (horizontal axis: CPOUT voltage, vertical axis: UP, DN current.)
Check the current amount of the charge pump output current in transient simulation. In particularly, check whether excessive current does not flow compared to nomial current during switching.
Check the PFD input CLK FREQ RANGE in All Corner. (TSPC type has low frequency bottle-neck.) If TSPC is used, it must be checked whether it operates regardless of PVT under 1/10 condition of lowest ope frequency.
Check the BW of Unity Gain Buffer connected from the CP OUT node to the OUTB node.
Check the PSRR from VDD to CP current.
Check the CP current noise
Check the control range of current value of CPI.
Check the control range of current value of CPP.
Check the control range of PMOS/NMOS bias for the calibration of UP/DN current mismatch of CP.
Is it possible to monitor the current entering to the CP through ATB from outside? (25uA bias current)
Check the BW of the Unity-Gain Buffer for the DC level of the Proportional Path in the dual path PLL. It must be at least five times higher than the PFD operation frequency.
Check the default value of LF cap by simulation. (horizontal axis: Vctrl, vertical axis: capacitance)
Check the control range of LF capacitance
Check the control range of LF resistance
Check the current sink capability of Unity-Gain Buffer used for Proportional Path to capture DC voltage level PLL. It must be larger than the current of CPP.

Check the timing of Dualus pre-scaler with following PNR block.
Check the maximum operating frequency range of the POST divider. (Check it with VCO. The Vctrl of VCO is because overshot may occur during PLL locking process.)
Check the maximum operating frequency range of the MAIN divider. (Check it with VCO. The Vctrl of VCO is because overshot may occur during PLL locking process.)
Check the maximum frequency of the Pre divider.
Check the minimum frequency if the TSPC type is used for the PMS divider.
Add 15% of high-speed margin and additional 5% of LVCC margin. In the case of IQ divider, timing margin is not 1 clock but half clock. Therefore, it is necessary to check the L lower because it is the block that needs more timing margin.
LVCC margin shortage occurs during high speed operation of post divider. (Result revealed in 14LPP MPW) In the case of fast dividers, 1. Add 15% of speed margin and additional 5% of LVCC margin. 2. In addition, check the operating supply voltage with ramp-up and ramp-down VDD.
Apply 'complementary inv stage' to the rst / rstb so that the rst / rstb can toggle for high speed divider using F / F (ddffrst in CDK). Check the simulation waveform whether the output of divider is stuck or not. - List up the blocks using differential F/F. (such as 'ddffrst' in cdk) - The slew rate of rst / rstb signals applied to the F / F must be larger than 5% of the input clock period. Reason: Occurs when the I / Q divider is installed in the 14nm MARU SATA project and the I / Q divider does normally due to the aging property even when the reset is toggled. = = > Accident possibility occurs when a error occurs
Operation freqeuncy range of the Pre divider
Operation freqeuncy range of the Main divider
Operation freqeuncy range of the Post divider
VCO frequency range (horizontal axis: Vctrl, vertical axis: Frequency)
The value of Kvcoi(integral path frequency gain) The value of Kvcop(proportional path frequency gain) (horizontal axis: Vctrl, vertical axis: Frequency_Gain) The value of Kvcoi / Kvcop (the ratio of Kvcoi per Kvcop)
PHASE NOISE only in VCO CELL.
The value of PSRR with 'VCO + VREG + VREG Control AMP' Run the simulation with real VCO directly attached, or with the small signal resistor model of VCO (having DC value at the operation point).
If VCO structure is 'Supply-Regulated VCO', stability of 'Vreg Control AMP' must be checked. Check the sta the input node of AMP and the Vreg node. (If VREG is implemented as PMOS, please be careful.) In addition, the BW must be larger than the poles made from 1/RC2 (PLL loop filter), which does not affect PL

Check the phase noise with merged 'VCO + VREG + VREG Control AMP + Bias' blcok. All bias networks fron must be included.
Check which component in 'VCO + VREG + VREG Control AMP + Bias' makes the most noise at each 100K point in the noise summary. Be careful because the Bias and the RC filters could generate a lot of noise.
Check the oscillation at all corners. If it is an even stage such as 4 stages, it is necessary to pay attention to sizing of cross-coupled transistors. cross coupled transistor is too small, then harmonic oscillation could occur. If the size of cross coupled transi big, a lot of current could be consumed.
Verification of VCO leakage current during power down in each corner (especially the worst corner)
Check the control range of bias current of the VREG AMP. The bias current of the VREG AMP is closely related to the phase noise. Power can be reduced by reducing th current, if the low phase noise is not required.
Can the VCO control voltage be monitored?
Check whether DCC can operate under the MIN / MAX frequency of VCO considering 'Vctrl' and AFC band.
Check the duty cycle of signal after passing DCC
Check the minimum frequency of DCC with VCO under high voltage condition. In case of using Ring VCO, there is a possibility of malfunction if input swinging is too small. High Voltage Condition : 150% of normal voltage.
Check the behavior of digital AFC with VCO. In this case, the VCO can also use the verilogA model.
After changing AFC code, check whether the VCO frequency is completely stabilized and then start counting Couter must be hold during several clocks.
Check the AFC counter's maximum operating frequency range with VCO attached. (Check the operation with 'Vctrl' of VCO)
When scanning an AFC band, make it start in an arbitary band. If the current frequency is lower than the target, find the frequency band by raising it. If the current frequency is higher than the target, find the frequency band by lowering it. For example, if the start point is at the half of the total code value, scanning time can be reduced by half.
If the PLL wake up in a status such as slumber or power down, make the start code of the AFC of the PLL/CD the code you found last time. In this way, except for the first power-up period, the time required for AFC operation can be greatly reduced the arbitary code start function of "1.6.4" must be included.
Can you start in an arbitary band when scanning the AFC band?
How many AFC bands do you have? If the initial lock speed is not a problem, 32 or more are recommended.
The range of Vctrl that is fixed when starting AFC.
Check the operation of sigma delta modulator. It can be performed with TOP simulation with Verilog model.
If phase blender is used during phase selection, check if the overlap time between different switch selection longer than the phase difference time.
Check the bandwidth and phase margin for the PLL loop parameter using MATLAB or SCILAB. Considering the change of the parameter for each corner, stability should be checked for all corners.

Check whether it is locked through transient simulation. Check frequency, VCTRL ripple level and output waveform also when locked. Simulate under the Best / Typical / Worst condition.
Check the total phase noise and obtain the rms value by finding the phase noise for each block. The rms value is also required after applying MASK for each standard.
For jitter monitoring of the PLL reference clock received through the SOC, the reference clock is transmitted of the PLL output clock to measure the jitter.
Check the frequency of output clock including divided clock of PLL. - Check the frequency by using FFT of output clock in SPICE or Verilog model. (A bug that wrong 99.84MHz output clock was gernated instead of 100MHz clock due to the wrong port conn product.)
Make sure that the asynchronous divider does not switches on-the-fly in the PLL. In this case, the PLL lock may be broken because the amount of phase error that is not desired for the PFD n injected, so you should not change the value of the PLL divider with asynchronously or mux the value of the ratio. If the PLL lock is broken, the PLL lock detector will be released and the PLL will be locked again from th
Make sure that after the DCC is fully stabilized, the RSTN of the divider become high. If the reset of the divider is release before the DCC otuput stabilization, the state of the divider enters an ab and self-oscillation can be occur. The sequence should be managed to prevent this abnormal state. (Please refer to following EDM data.) https://edm2.sec.samsung.net/cc/link/verLink/157767135466704258/1
Current or power consumption in PLL power down mode. Simulate under the Best / Typical / Worst condition
Check if the PLL can be enabled again after timeout so that the IP is not hung when the VCO does not start t
Verify the verilog simulation results using PLL real model, not PLL hybrid model. (Verification is performed using hybrid model in customer side, so it is necessary to check simulation throug at IP level.) - Obtain simulation results for PLL itself. - Check all operation modes.
Check the operation of temperature compensating for each corner (x-axis : temp, y-axis : Voltage of BGR) *Compensation according to temperature change
Check the operation of temperature compensating with Monte Carlo simulation. (x-axis : temp, y-axis : Volta Have to check temperature compensation Curve in the each case where Chopper is on and off. In the case where chopper is on, Check the compensation in transient time simulation with Monte Carlo.
Check the operation of START UP in transient time simulation with fixed corner. *In steady-state, START UP circuit have to supply negligible current to the bias circuit in order not to affect th characteristics.
Check the operation of START UP in transient time Monte Carlo simualtion.
Check the each value of the current of Poly Resistor and External Resistor(Rext). (x-axis : temp, y-axis : Cu *Current Value according to temperature change

Check the each value of the cuurent of Poly Resistor and External Resistor(Rext) with Monte Carlo. (x-axis : Current)
Check the time that is for the BGR output to be in steady-state. *All calibration circuits must operate after this time.
Check the operation of BGR in repeating each mode (Power down mode and operation mode) *Sequence : OP mode -> PD mode -> OP mode ->...
Regardless of product specifications, check the maximum BGR operation voltage range. (all of 1V and 3.3V)
In final stage of BGR, check the PSRR of output voltage node after RC filter. *The RC filter of BGR must be LPF with a sufficiently small Bandwidth.
Implement a voltage bias generator composed of resistor ladder for getting multiple bias voltage.
All mosfet in currnet source shall conform with (Vds-Vdsat) / Vdsat > 25% for getting saturation margin. *Vds : a Voltage between drain and source , Vdsat : The Vds point where mosfet enters saturation region Check current source current variation wtih output voltage sweep from 0V~supply.
For getting fast settle down of BGR, take the option of shorting node of Resistance in RC filter(LPF) placed ne a specific time. *RC filter have series connection of RC like RC/RC/RC../... . When you design it, you have to design that all capacitances in RC filter get charged in the shorting option b as many as resistances in shunt(parallel).
Check The BGR voltage be connected only to the gate of the TR in all path. When the BGR voltage is connected to other parts in IP through a large RC filter, check the possibility of IR d leakage current. If the BGR voltage is connected with the drain of TR, There is a high possibility that the leakage current will c temp. In particular, when a module such as the ATB swith is connected with BGR output, the drain of the internal p connected. So it have to be checked all path in IP top level.
Check the controllability of BGR output voltage and voltage range.
Check whether it is voltage bias generator with a resistor ladder.
Check the controllability of Rpoly master current and range. Implement for changing BGR output, Poly bias copy ratio or reference poly value.
Check the controllability of Rext master current and range. Implement for changing BGR output, Rext bias copy ratio.
Check the location where Reference circuit is placed. Reference Circuit shouldn't be placed in die edge (in order not to be affected from Package stress)
Check whether Rpoly/Rexternal current can be monitored.
Check the calibrated resistance value after calibration simualtion that run with RCAL digital/Analog block, when Common Block(CMN) is driving TX/RX at the same time.
Check reduction of resistance dispersion after calibration simualtion that run with RCAL digital/Analog block Corlo, when Common Block(CMN) is driving TX/RX at the same time. *Compare resistance changes before and after simulation.

Match the trun-on resistance value of switch in RCAL block with in TX driver/RX termination, when Common Block(CMN) is driving TX/RX at the same time. The bias conditions of transistor in RCAL and in TX driver/RX termination can be different which causes differ resistance. So Even after calibration, on-resistance difference causes inconsistency. In a situation, thin gate transistor in RCAL and thick gate TR in TX driver/RX termination, they have a differer condition, so adjust the on-resistace with modifying thick gate transistor size. It is hard to make it in all PVT condition, but have to match each center approximatly.
How many resistance-control bits does RCAL block have? when Common Block(CMN) is driving TX/RX at the same time. *Control resolution in resistance range.
Check whether it have function that make the calibrated value get offset, when Common Block(CMN) is driving TX/RX at the same time.
Check whether it have function that make value get offset or control value in manual with P node and N nod when Common Block(CMN) is driving TX/RX at the same time. (used to control rising time, falling time or intr
Have to simulate following condition : -10% faster than target speed, VDDL ± 20%, VDDH ± 20% (It must also be simulated in SFF and FSF model conditions.)
Fill out a table with min/max duty measured from Monte Carlo simualtion that run following condition : -10% faster than target speed, VDDL ± 20%, VDDH ± 20% *Detail condition case : 4 case in power (VDDL ± 20%, VDDH ± 20%) X 2 Case in temp (Hot, cold) = 8 case with Monte Carlo(100 times) for each case.
Check the waveform of output and power consumption with each case where input data is 0 or 1 in entering
Fill out a table with rise/fall time, duty ratio, propagation delay. Check the data waveform in the sign-off speed condition also.
Fill out a table with rise/fall time, duty ratio, propagation delay. Check the data waveform in the sign-off speed condition also.
In entering disable mode(EN = 0), check the output states(Y,YC) are going to be completely setted to defaul values(which are fixed values when the buffer is in disable mode), when the output states are opposite with values before disable mode. *If the buffer, which drives output to default-output-value in disable mode, doesn't have enough strength to node against cross-coupled inverter, output values(Y,YC) are not going to be complementary completely. In that case, there is a possibility that the leakage current will occur.
Fill out a table with rise/fall time, duty ratio, propagation delay. Check the data waveform in the sign-off speed condition also.
Fill out a table with rise/fall time, duty ratio. Check the data waveform in the sign-off speed condition also.
Fill out a table with Setup/hold time, rise/fall time, C2Q delay.
When you use TSPC(True Single-Phase Clock), make sure that it operates properly in frequency that is as slow as one-tenth of the normal operating freque

Check the maximum data speed in sign-off condition.
Fill out a table with capacitance value according to main bias voltage, and measure a bandwidth of capacitor.
Check a turn-on/-off resistance of switch in operating range of in-/out- (input/output node with DC bias)
Check the setup/hold timing margin in each serializing step. In all PVT conditions, see if the same clock samples the same data at each stage. If the data is sampled by th or the previous clock depending on the PVT, a hole must occur in such a PVT condition. In the normal serializer simulation, it is very hard to find mulfunctioning of serializer (because the probability point sampling is very low in normal operation), all the timing of every serializer step must be checked. Checking with script is recommended.
Check the BER test of serializer using BER Test Bench. Serializer hardly fails in fixed PVT condition, so check sweeping VDD from 1.4V to 0.6V. (VDD sweep with 0.2V/us, during 4us time.)
~~Inactive because it is judged as unnecessary item~~ ~~Design so that FF does not write back to back in serializer. (Back to back F / F: There is no logical between F~~
Is there an internal loopback to check the operation of the Serializer?
Is there an option to flip the phase of TX serializer clock (TBC) which is sent from Serializer to PHY digital?
If the 1st sampler of Deserializer is Sense amp DFF, check the DC offset. Check it again after offset calibratio
Check the timing of all the DATA with CLK and divided CLK with high speed CLK. Like Serializer, check t timing at each stage. You must include the DFE or BBPD in the test bench to reflect the effect of wrong input timing. Check if th samples the same data at each stage in all PVT conditions. If the data is sampled to the next clock or the according to the PVT, a hole must occur in such a PVT condition. In the normal deserializer simulation, it is very hard to find mulfunctioning of deserializer (because the meta-point sampling is very low in normal operation), all the timing of every deserializer step must be check Checking with script is recommended.
Check the BER test of deserializer using BER Test Bench. Deserializer hardly fails in fixed PVT condition, so c by sweeping VDD from 1.4V to 0.6V. (VDD sweep with 0.2V/us, during 4us time.)
Is there an option to flip the phase of RX deserializer clock (RBC) which is sent from Deserializer to PHY digit
Check the driver out amplitude in the maximum data rate of each protocol. [PCIe, USB] Spec is 800-1300mV. Measures the maximum value in setting with the largest swings.
[MPHY] The spec is ~600mV. Measure the maximum value in the setting with the largest swings.
Check the pre-emphasis level of Driver output, check whether the bit-duplication is used, and check the Driv designed to have the effect of pre-emphasis during 1-UI. [PCIe] Check if there is no problem for supporting -3.5 dB in Gen1 mode and -3.5 dB / -6.0dB in Gen2 mode. mode, check 5.1.10. [USB] Check if there is no problem for supporting -3.5 dB in Gen1 mode. For Gen2 mode, it is same as the pr Gen3 / 4.
[MPHY] Check if there is no problem for supporting -3.5 dB / -6.0 dB.

Check Driver rise / fall time and mismatch. [PCIe] Check if there is a setting to reduce the slope to satisfy TX rising/falling time specification of 50ps or r Gen1) (For example, the option to reverse the direction of the AC-cap driver.) (Parasitic capacitance must be included in schematic and test bench.)
[MPHY] Check if there is a setting to reduce the slope to satisfy TX rising/falling time specification of 50ps or Gen1) (For example, the option to reverse the direction of the AC-cap driver.) (Parasitic capacitance must be included in schematic and test bench.)
[PCIe] Check the output jitter including channel model, PKG, HSIO and T-shirt (if necessary). (The eye diagra drawn in units of 1-UI to check DCD.)
[MPHY] Check the output jitter including channel model, PKG, HSIO and T-shirt (if necessary). (The eye diagr drawn in units of 1-UI to check DCD.)
[PCIe] Check the amount of ISI at all points of pre-driver data path. Make jitter less than 1ps. (The eye diagra drawn in units of 1-UI to check the DCD.)
[MPHY] Check the amount of ISI at all points of pre-driver data path. Make jitter less than 1ps. (The eye diagr drawn in units of 1-UI to check the DCD.)
Check the swing and bandwidth of the pre-driver output. Perform this item if the pre-driver is CML.
[PCIe] Add the VDD/GND package model and compare the jitter level with the result of 5.1.4.
[MPHY] Add the VDD/GND package model and compare the jitter level with the result of 5.1.4.
Check the amount of jitter and power consumption according to each JEQ control bit.
Be sure to attach the package model and check how much self DDJ is on the simulation. (self DDJ: In the case of a voltage mode driver using a regulator (MPHY, DPHY, etc.), data depedent jitter (DD because the Vreg node of the driver changes according to the data pattern.) Use at least PRBS10 because the more complex the pattern, the more various tones are created and the DD more jitters occur when the data pattern is PRBS10 than when the data pattern is K28.5, the difference can to the self induced jitter.
[PCIe, USB] For a 16Gb/s, check the voltage level of the driver by sweeping Tx amplitude, Pre-Shoot, and De level with long bit pattern. Record the setting values corresponding to 10 presets of PCIe. Also, check that m Pre-Shoot and De-Emphasis. (See the PCIe Base 4.0 v1.0 Table8-3)
[PCIe, USB] Check whether the voltage level of TX amplitude is more than 250mVpp with 1G pattern (EIEOS) 10. (See PCIe 4.0 v1.0 Figure8-9) This simulation is for checking whether a large swing is transmitted so that the signal detector of the RX can when EIEOS is transmitted to the RX in the Electrical Idle state.
[PCIe, USB] Check whether the AC common mode voltage satisfies less than 50mVpp for Gen3/4 and 100mV after LPF whose bandwidth is half of each data rate, when the peak to peak difference of AC common mode satisfies 150mVpp or less (for all frequency domain).
[MPHY] Check whether the maximum and minimum AC common mode voltage satisfies less than 310mV an 160mV, respectively. The glitchs in AC common mode voltage can occur due to timing skew between TXDP and TXDN. (The present voltage level of the AC common mode voltage in DSR is 200mV. 10/02/2020)
[PCIe, USB] Check the difference of DC common mode voltage between High-speed data transmission mode Electrical Idle mode is less than 100mV. During High-speed data transmission mode, DC common mode volta affected by amplitude setting. On the other hand, during Electrical Idle mode, DC common mode voltage is a leakage current of driver. Make sure that the worst case is fully considered in simulation.

[PCIe, USB] Check whether it enters Electrical Idle within 8nm after EIOS signal. Apply the '1' signal to EI_EN at the point of data transmission is cut (all 0), during the data transmission with data in the TX top level (as like the signal comes from PMA digital aligned with same tx_clk). Assume that th of parallel data(just before EI_EN) is EIOS. Then, check the time where the difference of common mode volta TXDP and TXDN become within 5mV after the last bit of this EIOS symbol (the last bit of EIOS) is transmitted and TXDN. It should be less than 8nm second.
[PCIe, USB] Check whether the EIEOS signal is transmitted within 8ns after Electrical Idle is released. The test bench needs to be generated in TX top level as following : When the EI_EN is falling to '0' signal, give parallel input data to TX and start data transmission (as like the s from PMA digital aligned with same tx_clk). Assume that the first symbol of parallel data is EIEOS. Then, chec where the first wave form is generated after Electrical Idle is released. It should be less than 8nm second.
[PCIe, USB] Check the point of toggling time of comparator output according to the change of resistance (50 1Kohm) after AC coupling capacitor in Receiver Detection simulation. (50ohm is for termination case and 1K EI_EN(open) case of RX.) Perform cross check with PMA digital engineer. The total amount of voltage change of TXDP/TXDN for low impedance checking should be less than 600mV. receiver detection simulation with changing voltage of TX to positive direction. (The RX TERM specification is RTERM off case. However, when the voltage of TX changes to negative direction, just 1Kohm of RX TERM val the specification in RTERM off case because the switch in RTERM genertes negative current and makes highe value than real.) Simulte under the 4 cases. (AC capacitor MIN/MAX, Channel loss MIN/MAX)
[PCIe, USB] Check the differential/Common-mode return loss of Tx including HSIO, package model, and T-c Base 4.0 v1.0 Figure 8-19, 8-20.) (Decide which specification would be the sign-off between PCIe Base 3.1 and RL specification.)
[MPHY] Check the differential/Common-mode return loss of Tx including HSIO, package model, and T-co specification.)
[PCIe]
[PCIe] Check if the transition time of the main DRV and the AC DRV is appropriate for short transition t signal. (Note that post-layout simulation results may vary significantly.)
[MPHY] Check if the transition time of the main DRV and the AC DRV is appropriate for short transition t signal. (Note that post-layout simulation results may vary significantly.)
[PCIe, SATA, USB] Make sure that the final input of AC DRV doesn't toggle regardless of toggling of the seria Electrical Idle state.
Simulate RCAL analog circuit with RCAL digital code and check the calibrated resistance value.
Check whether the dispersion decreases by checking the amount of resistor change before/after calibration the result of Monte Carlo simulation.
Match the trun-on resistance value of switch in RCAL block with in TX driver/RX termination. The bias conditions of transistor in RCAL and in TX driver/RX termination can be different which causes differ resistance. So Even after calibration, on-resistance difference causes inconsistency. In a situation, thin gate transistor in RCAL and thick gate TR in TX driver/RX termination, they have a differen condition, so adjust the on-resistace with modifying thick gate transistor size. It is hard to make it in all PVT condition, but have to match each center approximatly.
[PCIe] Output voltage range of driver.
[MPHY] Output voltage range of driver.

[PCIe] Check the maximum value of pre-emphasis in dB scale.
[MPHY] Check the maximum value of pre-emphasis in dB scale.
[PCIe] For voltage mode driver, is it possible to monitor the voltage of Vreg of the driver.
[MPHY] For voltage mode driver, is it possible to monitor the voltage of Vreg of the driver.
How many bits are used for RCAL? (control resolution)
Can you give the offset to the calibrated value of RCAL?
Is it possible that each P/N of RCAL can have different value of manual setting or offset? (Used for rising time control, input-pair skew control) The P/N impedance of TX driver must be controled separately. Check the range with simulation.
When changing the power mode of PHY, check if the serializer output toggles except for P0 mode.
Displays all the implemented patterns. PRBS7 and user-defined pattern must be included. In addition, the us pattern must be set using registers such as APB / I2C.
If there is a fail in the BIST block itself, it is necessary to check it. Set the pattern that is sent on pu expected pattern differently and check if ERROR appears.
CDC check is required when different types of clocks are used in PHY digital.

spec (MIN/MAX)	Simulation Result value

	Number
완료 (OK)	0
미진행	161
해당사항없음	0
불충분	0
진행중	0
완료율 (%)	0/161

Designer Name	Reviewer	Check
		미진행
		미진행
		미진행
		미진행
		미진행
		미진행
		미진행
		미진행
		미진행
		미진행
		미진행
		미진행
		미진행
		미진행
		미진행
		미진행
		미진행
		미진행

		미진행
		미진행
		미진행
		미진행
		미진행
		미진행
		미진행
		미진행
		미진행
		미진행
		미진행
		미진행
		미진행
		미진행
		미진행
		미진행
		미진행

		미진행
		미진행
		미진행
		미진행
		미진행
		미진행
		미진행
		미진행
		미진행
		미진행
		미진행
		미진행
		미진행
		미진행
		미진행
		미진행
		미진행
		미진행
		미진행

		미진행
		미진행
		미진행
		미진행
		미진행
		미진행
		미진행
		미진행
		미진행
		미진행
		미진행
		미진행
		미진행
		미진행

		미진행
		미진행
		미진행
		미진행
		미진행
		미진행
		미진행
		미진행
		미진행
		미진행
		미진행
		미진행
		미진행
		미진행
		미진행
		미진행
		미진행

		미진행
		미진행
		미진행
		미진행
		미진행
		미진행
		미진행
		미진행
		미진행
		미진행
		미진행
		미진행
		미진행
		미진행

		미진행
		미진행
		미진행
		미진행
		미진행
		미진행
		미진행
		미진행
		미진행
		미진행
		미진행
		미진행
		미진행
		미진행
		미진행
		미진행
		미진행

		미진행
		미진행
		미진행
		미진행
		미진행
		미진행
		미진행
		미진행
		미진행
		미진행
		미진행
		미진행
		미진행
		미진행
		미진행

		미진행
		미진행
		미진행
		미진행
		미진행
		미진행
		미진행
		미진행
		미진행
		미진행
		미진행
		미진행
		미진행

		미진행
		미진행
		미진행
		미진행
		미진행
		미진행
		미진행
		미진행
		미진행
		미진행
		미진행
		미진행
		미진행
		미진행

Percentage
0%
100%
0%
0%
0%
0%
Comments(Due date/ResultFile)

4 Top simulation & check

Category	Sub Category	Item
		1. LOOPBACK_INTERNAL_BIST
		2. LOOPBACK_EXTERNAL_BIST
		3. LOOPBACK_LINE_LOOPBACK

IP TOP	**1.Spice Top sim**	4. BYTE_TO_BYTE_CLOCK_ALIGNMENT
		5. PLL_TO_SERIALIZER_TIMING
		6. PLL_TO_SERIALIZER_TIMING_WITH_VDD_TR
		9. POWER_DOWN_CURRENT
		11. PROCESS_ROBUST_DESIGN_LEAKAGE_TOP
		12. STA_BETWEEN_DIGITAL_PNR

		13. GLITCH_FREE_MUX
		14. POWER_UP_SEQUENCE_LEAKAGE
	2.Digital Top sim	1. LOOPBACK_INTERNAL_BIST
		2. LOOPBACK_EXTERNAL_BIST
		3. LOOPBACK_LINE_LOOPBACK
		4. POWER_DOWN_CURRENT
		5. BUS_INTERFACE
		6. JITTER_SIMULATION
		7. PROTOCOL_SIMULATION
		8. POWER_DOWN_SCENARIO
		9. INITIALIZATION_SEQUENCE
		10. DATA_RATE_CHANGE
		11. MODE_CHANGE
		12. POLARITY_CHECK
		13. CALIBRATION_OPERATION
		14. REGISTER_DEFAULT_CHECK
		15. FLOATING_TIE_CHECK
		16. GLITCH_FREE_MUX_DIGITAL
		17. ESD_SOFT_FAIL_VERIFICATION

		18. PLL_REAL_MODEL

list

No
1.1.1
1.1.2
1.1.3

1.1.4
1.1.5
1.1.6
1.1.9
1.1.11
1.1.12

1.1.13
1.1.14
1.2.1
1.2.2
1.2.3
1.2.4
1.2.5
1.2.6
1.2.7
1.2.8
1.2.9
1.2.10
1.2.11
1.2.12
1.2.13
1.2.14
1.2.15
1.2.16
1.2.17

1.2.18

t

Check Point
Attach the pre-sim result about the Internal loopback BIST on transceiver top. Replace the PLL with clock generator model and perform a simulation of "CD(clock distrubuter)+transceiver" "Best PV(process&voltage)/High Temperature", "Best PV/Low Temp.", "Worst PV/High Temp.", and "Worst PV (Performed by the person in charger of Transceiver Top)
Attach the pre-sim result about the External loopback BIST on transceiver(Tx) top. And attach the output waveform of Tx. Replace the PLL with clock generator model and perform a simulation of "CD(clock distrubuter)+transceiver" "Best PV(process&voltage)/High Temperature", "Best PV/Low Temp.", "Worst PV/High Temp.", and "Worst PV It is no need to include channel model. Post-sim layout simulation should include the post-layout netlist extracted from the additional GDS including to Rx. (Performed by the person in charger of Transceiver Top)
Attach the simulation result of "line loopback BIST" (external signal -> rxafe -> tx driver path in IP, analog to simulation results in in four conditions, which are "Best PV(process&voltage)/High Temperature", "Best PV/Lo Temp.", and "Worst PV/Low Temp."

Check the timing margin by performing the simulation of the whole path including the byte clock path in PMA
the timing between red- and blue-colored paths in below figure with RC-extracted post-layout netlist.
PMA-Analog delivers the byte clock by dividing the high speed clock and PMA-Digital delivers the parallel dat
1. Check setup/hold margin for each flip-flops and major blocks. Use the "timing check option" in Finesim to
(Performed by the person in charge of serializer and confirmed by the person in charge of Top.)
2. Analog designer should give the timing constraint, and digital designer should submit timing results to top
designer)
3. Analog designer should submit the data, which is basis of timing constraints, and Top designer should con

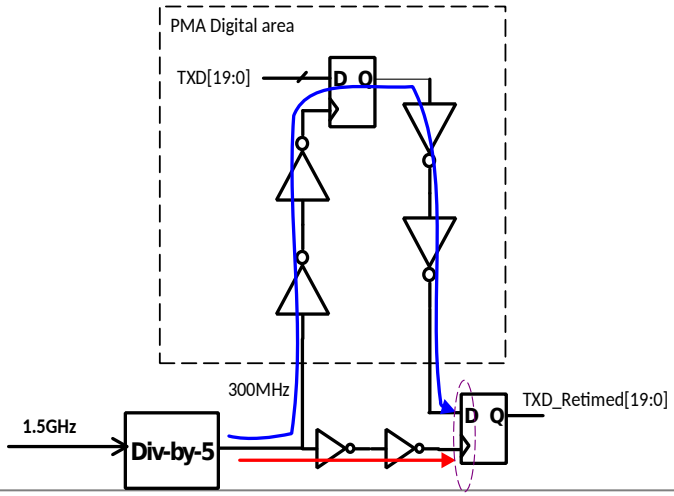

Verify function and timing with the extracted path from the high-speed clock of PLL output to Tx serializer.
Check the function with BER checker(not BIST block).
Check the setup/hold margin for each flip-flops and major blocks with the "timing check option" of the Finesi
More than 15-percent of period should be obtained considering OCV.
And write the result value about setup/hold timing margin (Performed by serializer desinger and confirmed b

Check the bit error with decreasing VDD from 1.4 to 0.6 continuously for Best, Typ, Worst corner.
It should be performed with post-layout netlist including whole path from PLL clock buffer to serializer.
The VDD should be decreased linearly and continuously for 4us or more. (corresponds to 0.2V/us).
The post-fix "_RCXT" should be added in the net name in order to extract RC for selected nets and C for othe
option" of Finesim, make a report of setup/hold margin of main flip flops.
The purpose of this simulation is to check the meta-stabiliy in serializer with sweeping power continuously, b
occur at specific timing condition so that it is hard to detect it in fixed corner simulations.
(Performed by serializer designer and confirmed by Top designer)

Attach the leakage current results as simulation of all power-down modes specified in standard.
(ex. burst, partial, slumber, hibernate, stall ...)
If the architecture of the IP is changed from previous one, power down simulation should be performed with
with new blocks.
(ex. ctrl[1:0] = 2b'00, 2b'01, 2b'10, 2'b11 , check in all variation)
- leakage current, floating node, DC path

Check the function and voltage drop due to leakage current.
Check the function in FFF/Hot Temp/High VCC condition with 10x leakage model.

If two PHY digital blocks are P&R-ed separately and integrated custom, the STA should be calculated includir
If it is not applicable state N/A. Otherwise, O and X for done or not, respectively.

Check all muxs that choose one clock from 2 clock input. And check whether each that mux is glitch free mu not used, it is possible to generate the glitch at the output of the mux and cause malfunction. And check whther the switching operation is done in the case of both clocks are exist. If one of glitch free mu switching cannot be done.
Check the leakage current with simulation in power-up /down(dn) sequence including the sequence of all po Write the leakage current value in power up/dn sequence. Refer to technical report below. https://edm2.sec.samsung.net/cc/link/verLink/155886970864004754/1 (Leakage current of VDDH should be below 20uA for PD mode after settling.) Apply below at test-bench. - Power sequence. (Floating --> 0V --> Ramp --> VDD) (ramp up time=80us, Supply DECAP=1uF) - Between VDD1 (input firstly) and VDD2(input later), the VDD2=floating interval should be exist (80us). - The pass/fail criteria is the voltage level and current of VDD1 and VDD2. (The purpose of this simulation is to check not the function but existence of leakage path in power start-up. test-bench with test-bench for function check in order to reduce simulation time.) Report the leakage current value in power up/dn sequence. Refer to technical report below. https://edm2.sec.samsung.net/cc/link/verLink/155886970864004754/1
Attach the digital top simulation results of internal loopback BIST in IP TOP (PLL+Transceiver).
Attach the digital top simulation results of external loopback BIST in IP TOP. Tx output pattern also should be
Attach the digital top simulation results of the "line loopback BIST" (external signal -> rxafe -> tx driver path
Attach the simulation results about leakage current of all power-down modes specified in standard. The verilog model including current model should be used. (power-awared model, ex. Burst, Partial, Slumbe
Check if the APB and interface are working properly, through the bench about read/write functions of all regi
If the PHY includes RX, check the simulation with specfied jitter in specification.
Check the regression simulations of all cases with PHY and upper layer.
Check whether digital block controls analog block appropriately for entry / exit in all power down scenario sp
Check the initialization sequence of PHY. And check if reset signal is propagated to digital block.
Check the PLL and clock circuits operation about data rate change from upper layer as specified in protocol.
If IP is multi-mode PHY (ex. ComboPHY), check mode switching when setting for each mode is applied.
Check the polarity of BUS data and DP/DN when PHY simulation.
Check the operation of calibration logic in PHY (ex. RCAL) using simulation.
Check the default value of SFRs is right to fit the project.
Check floating or tie pin in analog-digital interface and I/O using simulation.
State all mux switching clocks in normal operation and check whether each mux is glitch free mux or not. If is possible to generate the glitch at the output of the mux and cause malfunction. If one of glitch free mux in switching cannot be done. So it should be checked whther the switching operation is done in the case of both
Verify SOFT FAIL scenario by adding code in PHY verilog netlist, which set each node to random value. This s Link layer. After ESD event, IP should be possible to be restored."

Perform the simulation with PLL real model (not hybrid model). Because customer perform only PLL hybrid m
model should be done in IP level.
- It should be done in IP top level and all operation mode

- **Customer:**
- **IP Name:**
- **Process:**

spec (MIN/MAX)	Simulation Result value

	Number
완료 (OK)	0
미진행	29
해당사항없음	0
불충분	0
진행중	0
완료율 (%)	0/29

Designer Name	Reviewer	Check
		미진행
		미진행
		미진행

		미진행
		미진행
		미진행
		미진행
		미진행
		미진행

		미진행
		미진행
		미진행
		미진행
		미진행
		미진행
		미진행
		미진행
		미진행
		미진행
		미진행
		미진행
		미진행
		미진행
		미진행
		미진행
		미진행
		미진행

		미진행

Percentage
0%
100%
0%
0%
0%
0%
Comments(Due date/ResultFile)

5 Libray_Layout_Guide_Ma

WPE & STI in CMOS [1/3]

Samsung Confidential

Well Proximity Effect [WPE]

- **Distance** from the edges of N-well to NMOS or PMOS Transistors that require high accuracy should be larger than 2um (65nm, 45nm, 32nm, 28nm, 20nm, 14nm)

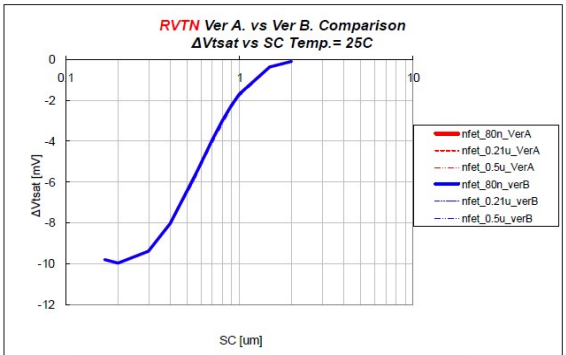

LN28LPP NFET WPE Simulation

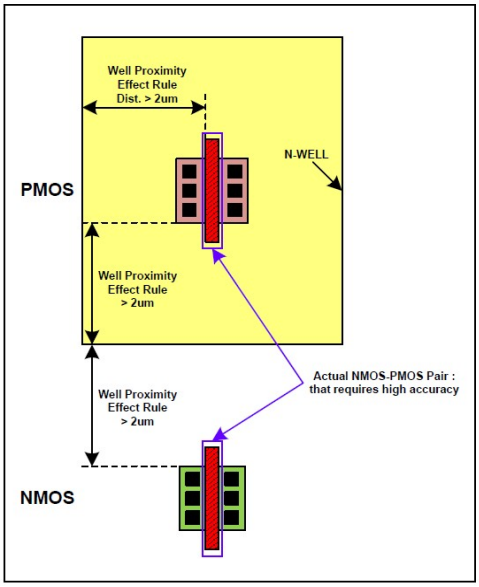

[Well Proximity Effect]

VPNP Layout in a Bandgap Reference

Samsung Confidential

VPNP Layout in Bandgap Reference

- VPNP(B) should be placed symmetrically around VPNP(A)
- Dummy VPNP devices are required to minimize boundary effects

Bandgap-Reference Layout Guide

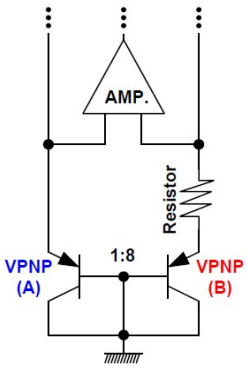

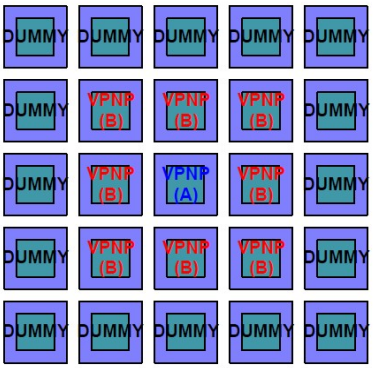

ex) VPNP Layout Example

Dummies can be removed if a process (such as BCD13750) provides regular bipolar transistors

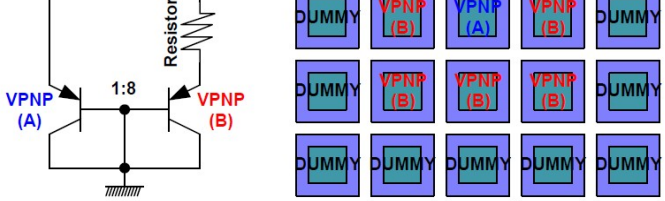

ex) VPNP Layout Example

Dummies can be removed if a process (such as BCD13750) provides regular bipolar transistors

Dummy Transistor Insertion

Samsung Confidential

Dummy Transistor Insertion

- **Dummys are required between two adjacent transistors to avoid boundary effects**

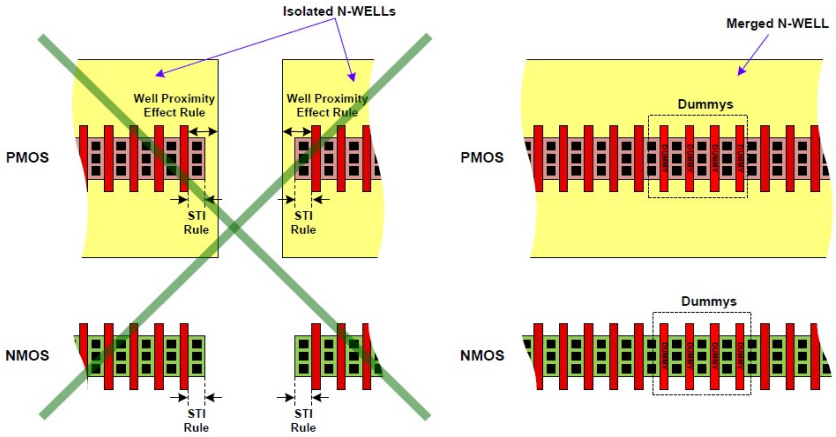

ex) Dummy transistor insertion

anual

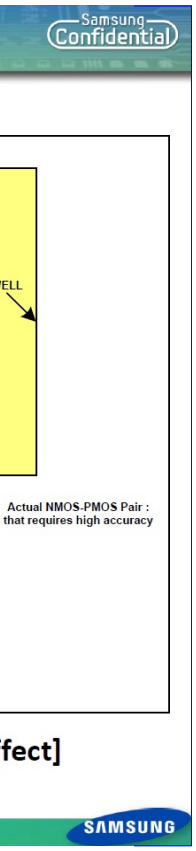

WPE & STI in CMOS [2/3]

Samsung Confidential

Shallow Trench Isolation[STI]

- **Distance [SA/SB]** from the active edges to NMOS or PMOS Transistors that require high accuracy should be larger than 1~1.5um

(65nm, 45nm, 32nm, 28nm, 20nm, 14nm)

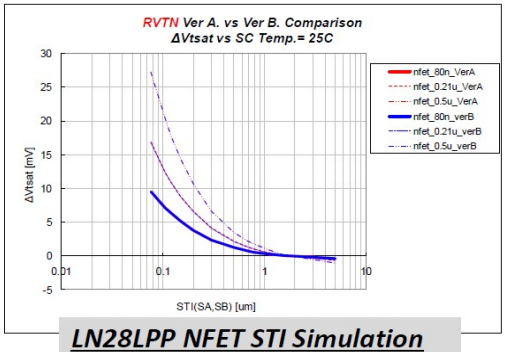

LN28LPP NFET STI Simulation

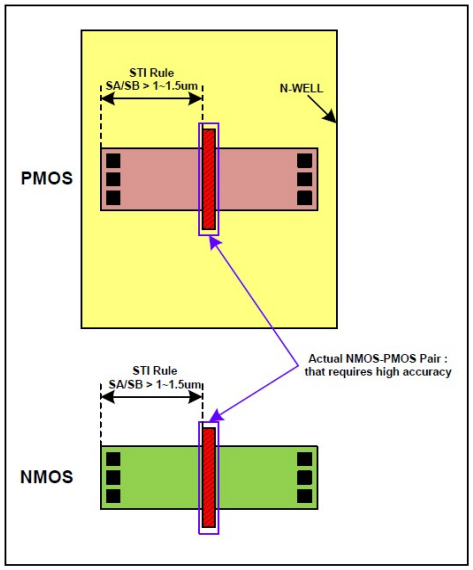

[Shallow Trench Isolation Effect]

Signal Routing [1/2]

Samsung Confidential

Signal Routing

- **Shielding line should be used to prevent un-wanted noise coupling from noisy lines**
- **Multiple vias are required in metal routing for reliability**
- **Un-related metal routings over the matched pairs should be avoided**

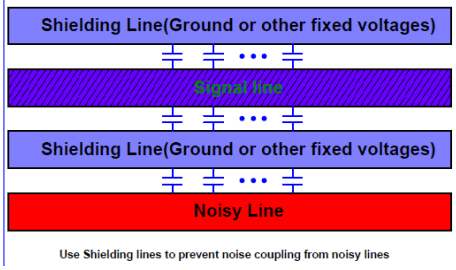

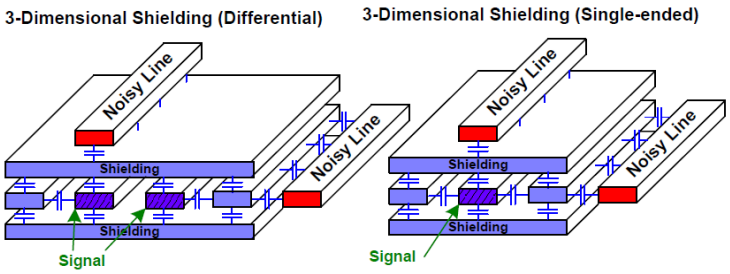

f a process (such as
r bipolar transistors

ex) Signal routing with shielding lines

f a process (such as
r bipolar transistors

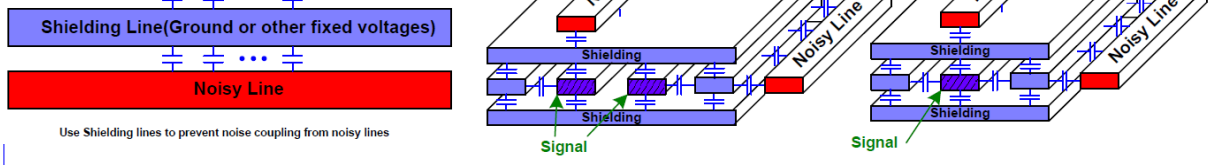

ex) Signal routing with shielding lines

lary

Metal Stack (LN10LPE vs. LN14LPE)

- LN14LPE 대비 1x metal thickness 감소 → metal 저항 증가
- 8x 및 15x metal 추가 → Power mesh의 IR drop /rise 감소 예상

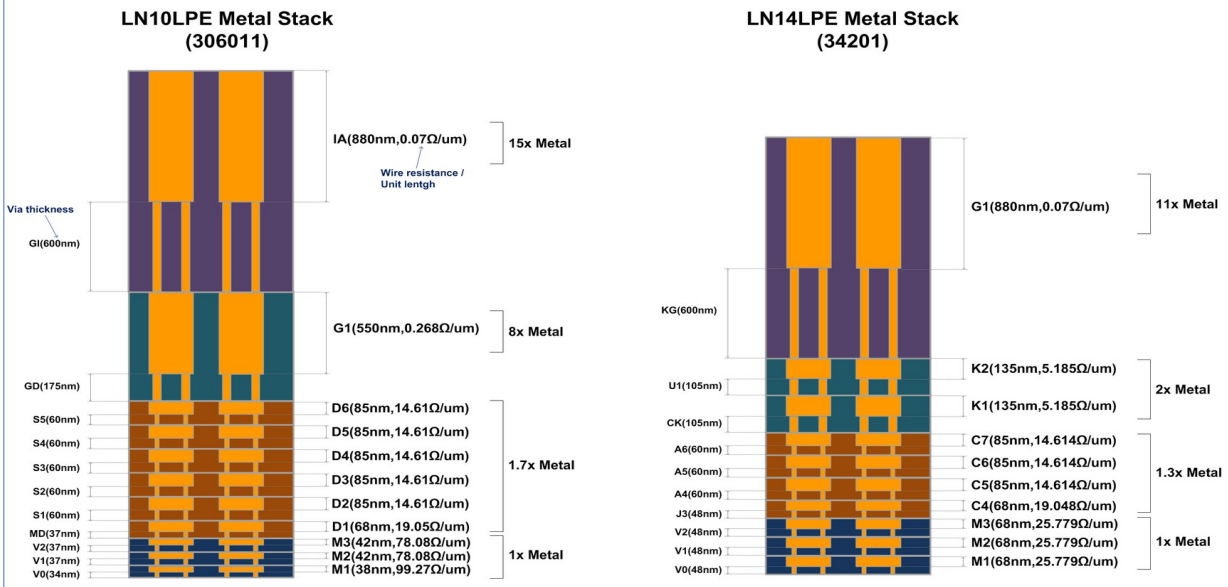

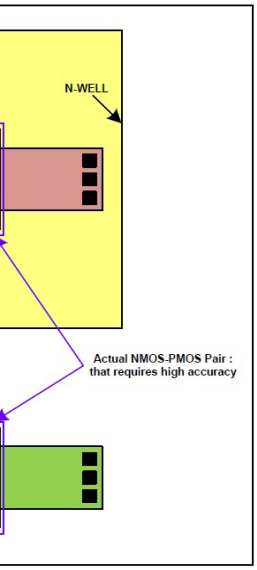

h Isolation Effect]

WPE & STI in CMOS [3/3]

MSC's Example

- Unit finger width for all related transistors
  - Better relative device matching
- Dummy for WPE/STI and Isolation
  - Compact layout size with WPE/STI
- Dummy transistors can be used as decoupling capacitors

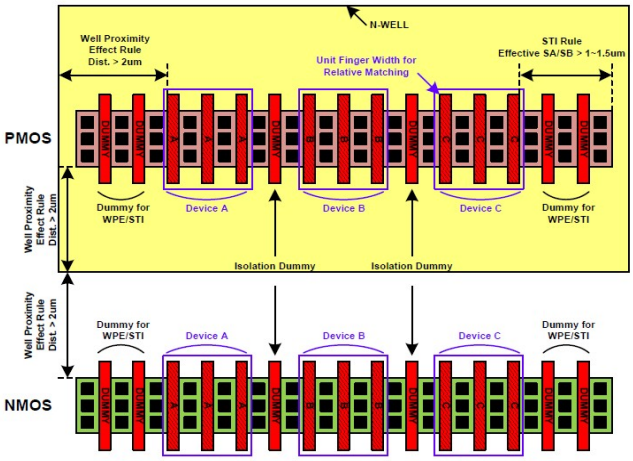

ex) MSC's layout example

ing from noisy

ided

nal Shielding (Single-ended)

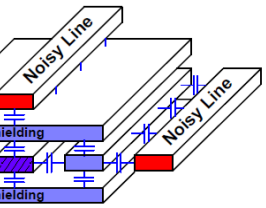

Signal Routing [2/2]

ex) Multiple vias in metal routing

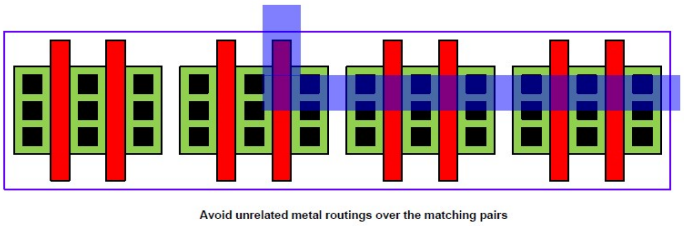

ex) Un-related metal routing

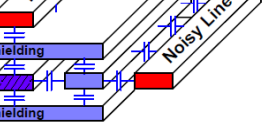

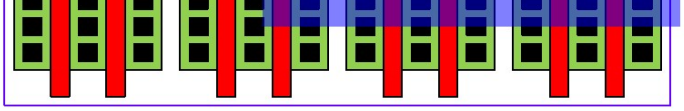

Avoid unrelated metal routings over the matching pairs

ex) Un-related metal routing

Samsung Confidential

k

G1(880nm,0.07Ω/um)	11x Metal
K2(135nm,5.185Ω/um)	2x Metal
K1(135nm,5.185Ω/um)	
C7(85nm,14.614Ω/um)	1.3x Metal
C6(85nm,14.614Ω/um)	
C5(85nm,14.614Ω/um)	
C4(68nm,19.048Ω/um)	
M3(68nm,25.779Ω/um)	1x Metal
M2(68nm,25.779Ω/um)	
M1(68nm,25.779Ω/um)	

Power Mesh Plan for LN14LPE(35001) HSI IPs

Samsung Confidential

LN20LPE HSI IP (25002)

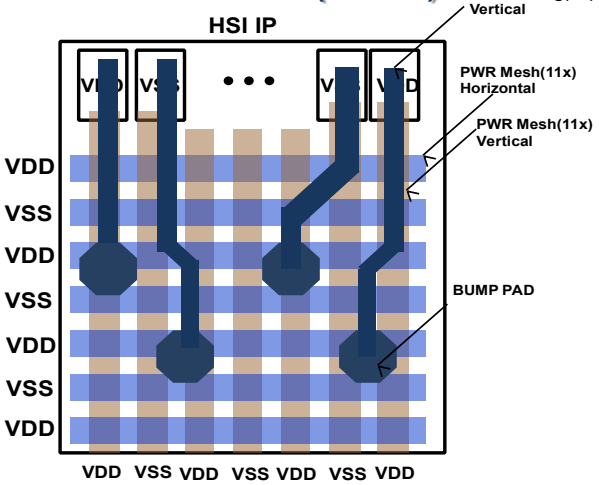

-No direct connection between Bump PAD / RDL(LB layer) & 11x PWR Mesh

LN14LPE HSI IP (35001)

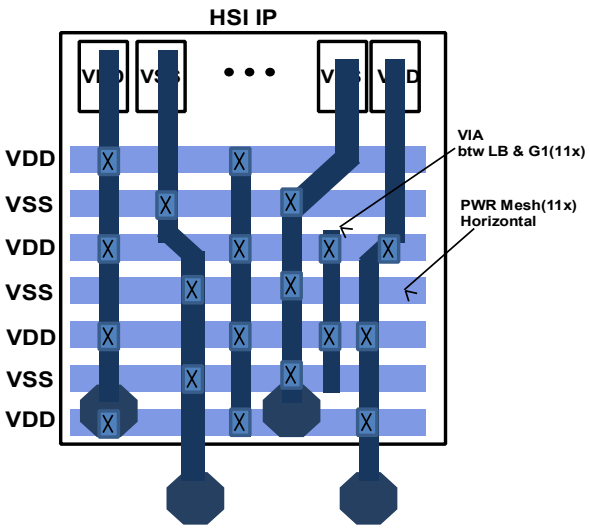

-11x Metal : Horizontal PWR Mesh
- Connection btw vertical RDL, LB layer (w/ BUMP) and 11x horizontal G1 PWR mesh metal
  -> To reduce IR drop using vertical LB layer

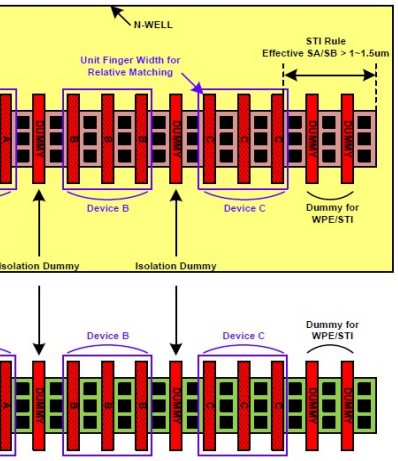

's layout example

Common-Centroid Layout & Number of Fingers [1/2]

Number of fingers

- Even number fingers should be used for better matching
- In case of odd number fingers, the current direction of source and drain should be kept consistent each other
- More than two contacts or vias are required for reliability

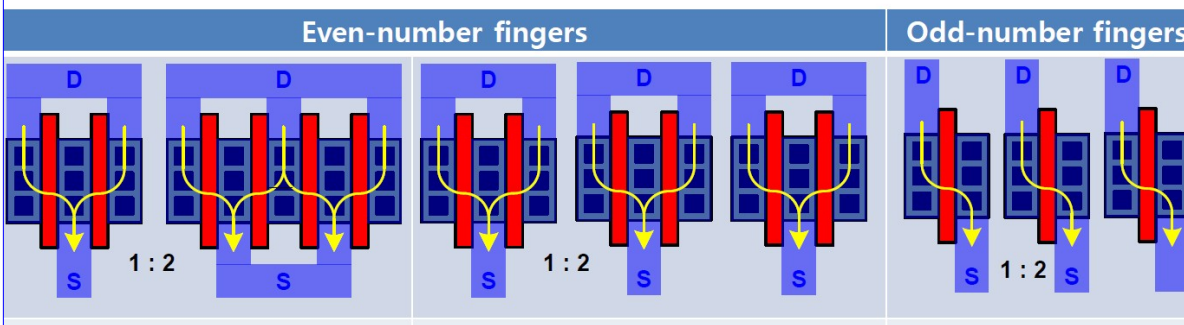

More accurate | Accurate but directional

ting

g

Noise

Deep N-Well

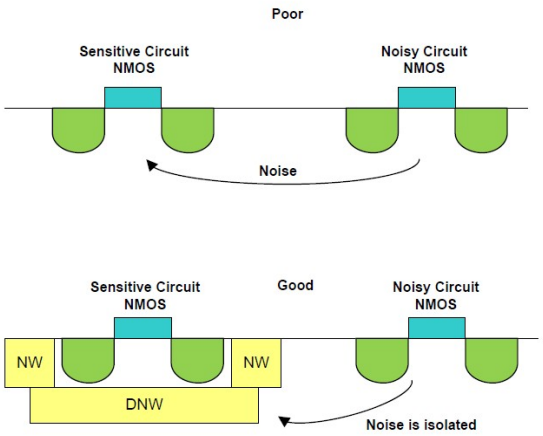

Guard Ring

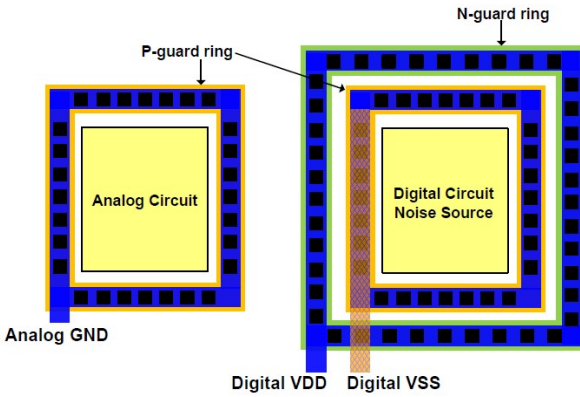

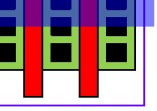

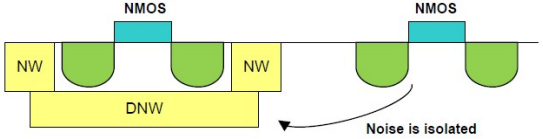

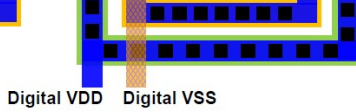

g

I IPs

Samsung Confidential

LPE HSI IP (35001)

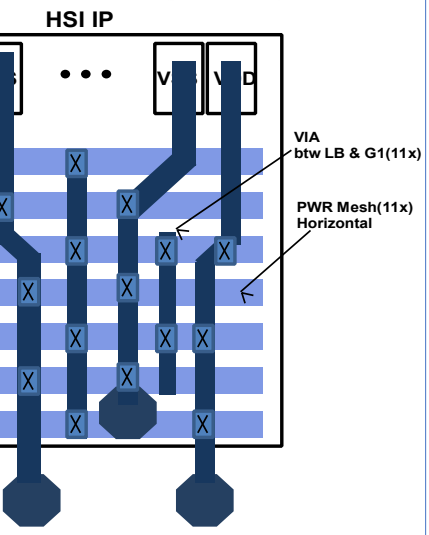

izontal PWR Mesh
w vertical RDL, LB layer (w/ BUMP) and
G1 PWR mesh metal
IR drop using vertical LB layer

Power Mesh Plan for LN14LPE(35001) HSI IPs

Samsung Confidential

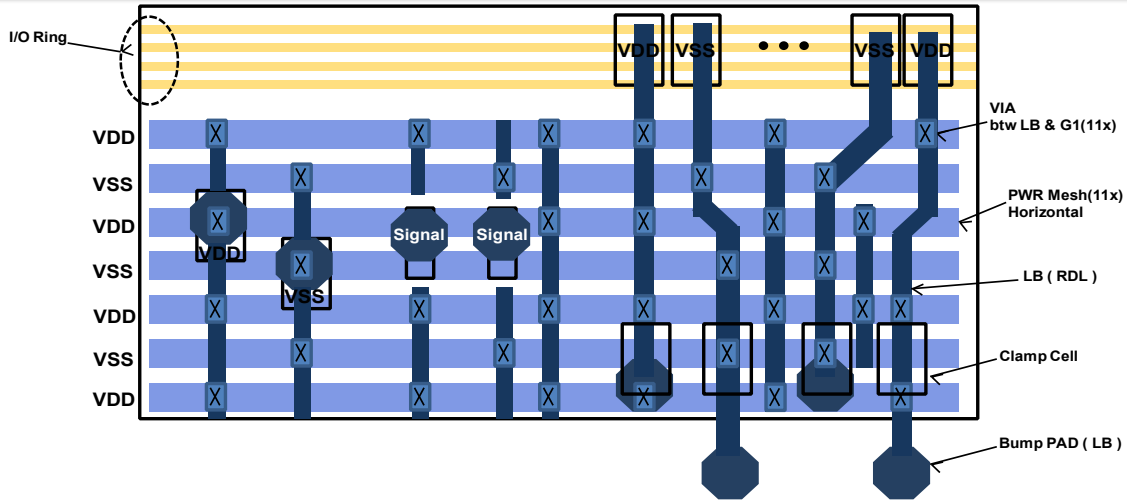

- Using area-type clamp cell, power / signal RDL(Bump to pad neck) can be reduced.
  LB bump & routing can be directly connected to G1(11x) layer.
  If Power/Gnd bump pads are located outside HSI IP boundary, LB RDL routing can be connected to G1(11x) mesh layer.
  -> In this case, more clamp cells can be needed to guarantee ESD level.

er of Fingers [1/2]

Samsung Confidential

atching
ion of source and drain should

eliability

	Odd-number fingers
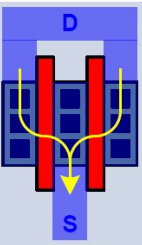	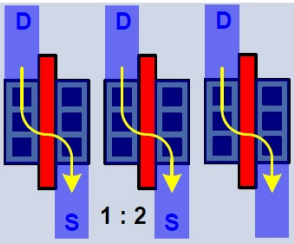
	Accurate but directional

SAMSUNG

Common-Centroid Layout & Number of Fingers [2/2]

Samsung Confidential

Common-centroid layout

- Common-centroid symmetry should be used to minimize a gradient effect

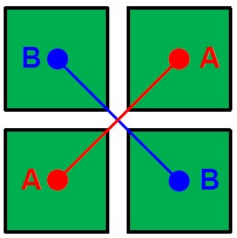

Use Common-centroid symmetry to minimize a gradient effect

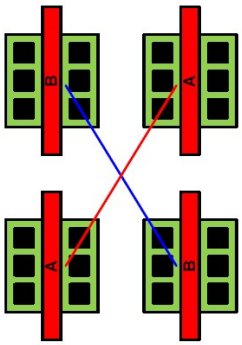

ex) Common-centroid layout

Samsung Confidential

Guard Ring

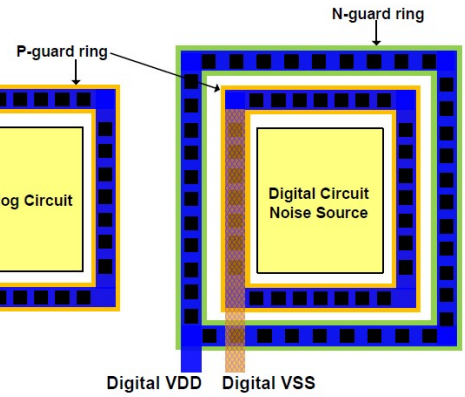

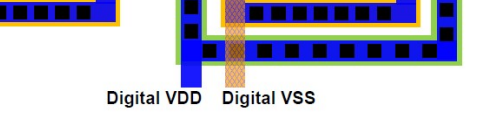

SAMSUNG

HSI IPs

Samsung Confidential

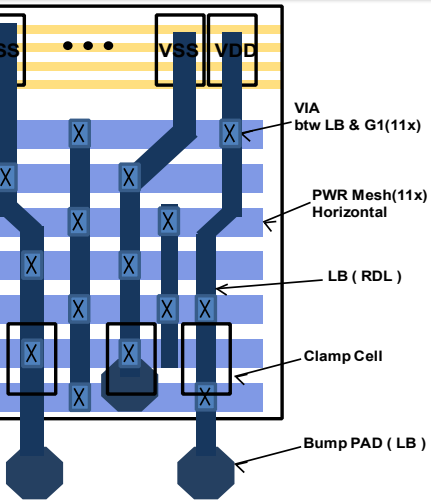

pad neck) can be reduced.

layer.

ndary, LB RDL routing can

rantee ESD level.

SAMSUNG

nber of Fingers [2/2]

Samsung Confidential

d layout

d to minimize a gradient effect

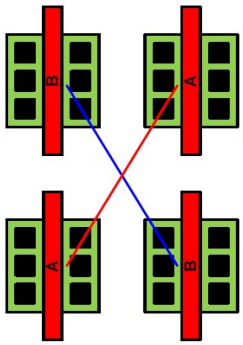

id layout

SAMSUNG

61 Library_Layout_review

Category	Sub Category	Item
	1. mismatch minimize	1. COMMON_CENTROID_AMP_INPUT_TR
		2. HIGH_SPEED_CLOCK_LOADING
		3. DUMMY_USAGE
		4. STI_EFFECT
		5. BP_EXTENSION
		6. CURRENT_MIRROR
		7. CASCODE_AMP_INPUT_TR
		8. BGR_VPNP
		9. RESISTOR_ARRAY_DUMMY
		1. REGULATOR_FEEDBCK_NODE

1.Layout Review	**2. parasitic minimize**	2. WIRE_WITHOUT_BUFFER
		3. CLOCK_NO_STUB
		4. BAR_VIA
		5. EM_CURRENT_PATH
		6. IO_ROT
		7. LOOPBACK_PATH
		8. SERIALIZER_DRIVER_PATH
		9. VIA_COMPLETION_SCRIPT
		10. VIA_COMPLETION_TOTEM
		11. VSS_CDM_CONNECTION
		12. LC_INDUCTOR_PSG
		13. LC_INDUCTOR_EDDY_CURRENT
		14. LC_INDUCTOR_PGS_PATTERN
		15. LC_INDUCTOR_PGS_ORTHOGONAL
	3. design guide	1. DUMMY_DECAP_FILLER
		2. AREA_TYPE_IO
		3. EM_TEXT_LOCATION
		4. CORE_BOUNDARY
		5. RDL_BUMP_DIFF_PN
		6. DRIVER_IO_CONNECTION

		7. SERIALIZER_DATA_CLOCK_FF
		8. I2C_APB_AREA_DECAP
		9. METAL_EM
	4. noise decoupling	1. 5. HIGH_SPEED_CLOCK_BUFFER_DECAP
		2. CLOCK_SHIELDING
		3. SHIELDING_GROUNDED_VIA
		4. CDK_DECAP
		5. GUARDRING_WIDTH_SPACE
		6. LC_INDUCTOR_GUARDRING_SPACE
	5. DB sanity	6. LONG_PIN_LEF
		7. IO_BOUNDARY
		8. VSS_CDM_PORT_NAME
		9. FINAL_GDS_LEF
		10. ACORE_DB_FINAL_VERSION
		11. METAL_OPTION
	6. Compatibility	1. METAL_OPTION_REPLACE
	7. power/ground	1. VSS_CDM_PORT
		2. POWER_MESH_SUBBLOCK
		3. POWER_MESH_TOP
		4. RDL_POWER_GROUND_VV_DROP
		5. REGULATOR_VREG_MESH
		6. GUARDRING_PG_CONNECTION
		7. GUARDRING_LOCATED_METAL_CAP

No
1.1.1
1.1.2
1.1.3
1.1.4
1.1.5
1.1.6
1.1.7
1.1.8
1.1.9
1.2.1

1.2.2
1.2.3
1.2.4
1.2.5
1.2.6
1.2.7
1.2.8
1.2.9
1.2.10
1.2.11
1.2.12
1.2.13
1.2.14
1.2.15
1.3.1
1.3.2
1.3.3
1.3.4
1.3.5
1.3.6

1.3.7
1.3.8
1.3.9
1.4.1
1.4.2
1.4.3
1.4.4
1.4.5
1.4.6
1.5.1
1.5.2
1.5.3
1.5.4
1.5.5
1.5.6
1.6.1
1.7.1
1.7.2
1.7.3
1.7.4
1.7.5
1.7.6
1.7.7

■ **Customer:**
■ **IP Name:**
■ **Process:**

Check Point
Check if it is in the common centroid format when drawing all the input pairs.
Verify that the loading value of the alternate PLL clock and the metal loading of the DIV5 clock on the Seriali each other. This is because the timing is different when the loading of two clocks is different due to the issue
A) Make sure that there is a dummy tri on both sides of the current mirror. B) Make sure that there is a dummy resistance at the end of the resistance array. C) Make sure that there is a dummy cell on both sides of VCO.
Make sure that SA and SB are guided for all analog trts that copy current.
For cascode TR used as current source, expand P + to see if the BP layer is turned on.
In order to be mirrored well, current mirrors such as bias should be made so that the current source and cop metal connection without TR distinction. When placed in individual TR units, mismatch occurs because of the
If the transistor constituting the input stage of the amp is cascode designed, Since it is impossible to deploy common centroid of input TR, At this time, you should minimize mismatch by checking TR. Example of placement) N0, N2 is cascode on INP side, N1 on INN side, and N3 is cascode on INP side, If N0 and N1 are compared, N2 and N3 are divided. in the same form as the one on the right. (Review after not available block list up)
If 9 VPNPs are used for BGR, 3X3 should be deployed and 1 center and 8 outsiders should be used as pairs.
If several resistances need to have the same value (BGR or BIAS, etc.), you should mix and place the unit res resistance instance to minimize the mismatch between instances.
The feedback node of the regulator should not be taken from the front of the Vreg, but from the front of the is consumed. Otherwise, it may differ from the voltage intended by IR drop by resistance. In the figure below voltage to node (2) instead of node (1). 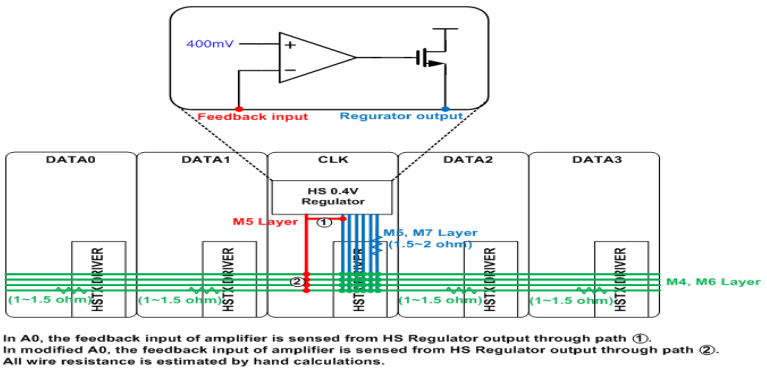

In the case of the clock coming into each subblock, check the distance between the last buffer before arrivin Especially, in the case of low frequency reference clock, if the clock frequency is low and runs too long witho may be too low to cause problems. (In case of digital, if there is a little power noise in case of max leakage, the next buffer.)
Make sure that there is no stub in high speed clock path.
Check if BAR VIA is used for power / ground rail. In order to avoid increasing resistance with small VIA, we ne possible using BAR VIA. (In addition to power / ground materials, the metal points are placed as much as pos
In order to prevent EM / IR drop of large current path, make sure that sufficient width is used. With a narrow
When connecting IO / power / ground cell with IP core, check if it is connected through all metal layer allowe through as much metal as possible, as many layers as possible. At this time, it is also confirmed that VIA was
Make sure the serializer-deserializer placement and path for loopback is shortest distance. If the clock has lo the loading must be the same.
Check if the path between serializer-drivers is connected to the shortest distance, or if there is useless loadi
If the overlap of the same net overlaps, make sure that the entire overlapping area is completely covered wi using script of layout team.
Using the script, checking the via of the net portion may not be completely filtered. To filter this out, crossch check the VIA of the silent layer. (Refer to the right column link data for the execution method.)
When connecting the VSS _ CDM port with the bi-directional diode, the port is connected so that it is complet ground landscape of the diode. This way, you can use VIA as much as you can. , the resistance of the ESD pa
In order to maximize the Q value of inductor, a pattern grounded shield must be installed. At this time, make following PGS related guide.
When creating pattern ground shield (PGS) pattern, arrange the lower layer mold so that it does not form loo current, which is an unwanted current, occurs, so these layouts should be avoided.
During PGS pattern generation, metal width is maximum, and metal space is minimized. (Draws the limit of
When creating PGS pattern, PGS layer should always be arranged to be orthogonal with inductor layer.
Make sure that the filler is not placed without reason where the DECAP (sgcap) can fit in enough. Make sure position for Revision.
When placing IO in Area type, check if guarding is arranged according to the guide of ESD team. At this time use sufficient resistance to prevent ESD when pulled out as port. (Widen to upper metal or multiple layers)
When using layout for EM simulation, make sure that TEXT is embedded in the actual power / ground locatio supplied to the location where the TEXT is embedded, if placed in the wrong position, it can be timed or over
Since the current guide enables the SOC floorplan with 0 space, check if the power / ground mesh or signal c substrate. There is a singularity, and if the scroll is used up to the gallery, it should be mentioned in the guid integration review.
Make sure that the RDL of the encloP / N is drawn properly. In order to be differentiated routing, it should be harmony while attaching as close as possible between P / N routing. It should be drawn to crack before it is a
Check whether the driver-IO path is connected to the shortest distance, whether it is arranged in enough wid metal resistance is arranged small. In order to reduce resistance, you may need to use the upper layer or mu a great effect on matching characteristics, so be careful.

In the serializer, check if the data / clock connection between the flip flops is available to secure hold margin routed close to the clock source to secure hold margin.
During top routing, the control signal such as I2C / APB is uploaded to the upper limit as much as possible, a VNCAP is placed using the lower metal. To maximize on-die decap per same area.
The part where a lot of current flows is not only IR drop, but EM issue occurs, Metal width is wide, layer is multilayer, VIA should draw as much as possible. If you know the current of the simulation, you should reflect EM in consideration of this. (The designer displays the current amount in the schematic and guides the layout team)
Check if decap is placed around the buffer that drives the high speed clock.
For signals sensitive to coupling, make sure they are shiedling. For example, VCO output, DIV5 clock output,
At the time of clock shielding, make sure that sufficient VIA is inserted so that shielding gear is connected to
Instead of the cell where dummy PC is used around the blocks constituting CDK cells, we need to place the c
In order to block records, guarding surrounding each block must be used. At this time, the width of guarding interval should be xxum.
The inductor layer and guarding must be more than 20um away. Inductor is often designed by breaking DRC with caution.
When extracting LEF, check if long pin extraction of power / ground is made so that VV drop can be connecte chip), connect to VREG VV drop, which is the output of the divider, so that routing using RDL can be added.
In the IO area, make sure that all cells are placed up to the IP directory. If it is empty, you should use filler ce
When multiple bi-directional diodes are pierced into a port of the same name, the port must be connected us there is no limit to the width or layer of the strip.
FINAL LEF needs to be generated from FINAL GDS. In accordance with this regulation, first deliver the LEF to sure that the GDS has not been modified.
Layouts such as IO, power cell, and overlap are using the managed DB in ~ acore. Therefore, this DB must a release from DT. Verify that the final DB released by the used acore DB from the DT is correct.
Make sure that you used metal option as target in product.
For the product to which metal option is changed and applied, it is confirmed that the layout considering this (Example) Use K1 and K2 completely overlapping in layout in 14LPP Jungfrau project.
Verify that the top layer's port is crooked in the VSS _ CDM port. If the situation does not work, as many laye possible to pierce the port, so that there is no ESD problem when chip level routing.
Check VDD / VSS connection from M1 to sub block top level overlap. As long as DRC allows, it should be out Check if there is floating surface.
Check if VIA is connected exactly between the sub block and the top power / ground mesh. The VIA of all blo top mesh.
Check if the RDL of the power / ground is drawn as wide as possible to cover the IP range and connected thr VV drop. It should be connected via VV to all areas where power / ground RDL and mesh are stuck. Also, it is by drawing the gap between the power RDL and the ground RDL as close as possible.
Since vertical output net such as VGN is used as power mesh of sub blocks, it allocates and arranges the sar as power ground mesh of IP. If VGC is selected as port, just like other power / ground mesh, add LB layer usi
When opening guarding, connection with subtrate / well is very important. Make sure that the resistance is s well drawn. Also, make sure that the resistance is connected to the P / G lab as small as possible.
In order to maximize the power / ground decap arrangement, in the area where guardring is drawn, the meta coating is drawn and placed. By doing this, power / ground decap can be reinforced without securing additio

	Number
완료 (OK)	0
미진행	53
해당사항없음	0
불충분	0
진행중	0
완료율 (%)	0/53

Designer Name	Reviewer	Check
		미진행
		미진행
		미진행
		미진행
		미진행
		미진행
		미진행
		미진행
		미진행
		미진행

		미진행
		미진행
		미진행
		미진행
		미진행
		미진행
		미진행
		미진행
		미진행
		미진행
		미진행
		미진행
		미진행
		미진행
		미진행
		미진행
		미진행
		미진행
		미진행

		미진행
		미진행
		미진행
		미진행
		미진행
		미진행
		미진행
		미진행
		미진행
		미진행
		미진행
		미진행
		미진행
		미진행
		미진행
		미진행
		미진행
		미진행
		미진행
		미진행
		미진행

Percentage
0%
100%
0%
0%
0%
0%
Comments(Due date/ResultFile)

6.2 Library_Integrity_revie

Category	Sub Category	Item
1.Physical Integrity	1.CDK	1. CDK Usage
		2. CDK Modification
	2.Reliability	1. BIAS Check
		2. Floating Node Check
		3. Polaris
	3.EM	1. EM rule
		2. Signal EM
		3. Power EM
	4.SI Analysis	1. Cio value of high-speed PAD
		2. Simulation w/ package model
		3. I/O model
	5.PI Analysis	1. CPM_PDN_JITTER_SIM
		2. Power mesh
	6.Others	1. nfin / nf
		2. Check for minimum W/L transitors for sensi
	7.ESD Check	1. HSIO Type
		2. HSIO Usage
		3. Area type IO usage
		4. CDM Buffer
		5. Back to back diode (Anti-parallel diode)

		6. PERC (Pre ESD review request)
		7. LB Power Mesh
		8. ESD 1ohm rule
		9. ESD current density check
		10 ESD error check
2.Requests for PHY	**1.ESD/Package/QA**	1. ESD
		3. GCM Code
		4.Package design
		5.Package model
		6, IP Qual
		7. IP Qual Test Board
3.DB Release	**1.Document**	1. Datasheet
		2. Test plan
		3. User Guide
		4. DOC release
	2.IMS	1. DB release
		2. IMS DB upload
		3. IMS DB upload checker
		4. PHY + LINK DB release
4.Others	**1.Model Version**	1.SPICE Model
		2.DK
		3.PDK
		4.IO_Power cell
		5.HSIO
	2.Tool Version	1.Analog Simulator(Spectre/HSPICE)
		2. Verification
		3. Totem
		4. Polaris
		5. Verilog
	3.Naming	1. Naming rule
		2. SIGNAL_NAME_FOR_TOP_SIM
5.Sanity	**1.Sanity check**	1. TSPC
		2. CROSS_COUPLED_INVERTER_PD

3.Sanity	1.Sanity check	3. BLOCK_UNDER_REGULATOR_RESET
		4. Check unused pin integration guide
		5. ncap as a capacitor

ew

No
1.1.1
1.1.2
1.2.1
1.2.2
1.2.3
1.3.1
1.3.2
1.3.3
1.4.1
1.4.2
1.4.3
1.5.1
1.5.2
1.6.1
1.6.2
1.7.1
1.7.2
1.7.3
1.7.4
1.7.5

1.7.6
1.7.7
1.7.8
1.7.9
1.7.10
2.1.1
2.1.3
2.1.4
2.1.5
2.1.6
2.1.7
3.1.1
3.1.2
3.1.3
3.1.4
3.2.1
3.2.2
3.2.3
3.2.4
4.1.1
4.1.2
4.1.3
4.1.4
41.5
4.2.1
4.2.2
4.2.3
4.2.4
4.2.5
4.3.1
4.3.2
5.1.1
5.1.2

5.1.3
5.1.4
5.1.5

■ **Customer:**
■ **IP Name:**
■ **Process:**

Check Point
Do you use CDK?
Check if there are circuits used by copying and modifying the original CDK circuits. (If there is a reason, attach the verification results for the circuit.)
Perform bias check with DDVC, etc. and attach the verification result.
Perform floating node check simulation and attach verification results.
Perform Polaris / SRSIM, receive verification results from S.LSI QA, and attach QA mail and execution results.
Check the version of the EM rule. Perform the simulation of EM with the latest tech file, and attach the result (the year when the EM rule released)
Perform signal EM and attach the verification result.
Perform Power EM to attach verification results, and describe the Worst IR drop / rise value.
Did you check the cio value of High Speed PAD? (Cio value is expressed including PAD (bump + RDL) and overlap. It is necessary to check return loss, etc.)
Did you perform Tx / Rx simulation including package / board model?
Do you create the IBIS/IBIS_AMI/Verilog Models?
Create the CPM model to perform PI analysis by inheriting the package / board model, and insert the VDD wa analysis back into the circuit to obtain the increase in jitter due to power noise. If the package or board model is not available, the PI simulation and power noise induced jitter value is obta board model of the previous generation. Jitter analysis is only obtained by proceeding with the VCO and the later clock buffer. If necessary, present the required cap quantity.
Did you check the IR drop, etc. by reviewing the power mesh before the IP layout starts? (Power mesh inspection is required due to quick IR drop, etc.)
Check the min / max value of nfin / nf of the TR used in finfet process.
What blocks have sensitive circuits, and what is the W/L of minimum-sized transistor in the block?
Check whether to use HSIO in the high-speed signal PADs (TxP/N, RxP/N). (If used, please inform the name of HSIO cell and capacity values of the PAD.)
Is there any PAD using HSIO in addition to High-Speed Signal PAD? Why?
Did you use Area type I / O? If used, is the area type I / O surrounding guarding according to the guide of the
Is the CDM buffer connected to the input PAD / port of IP? (When a signal is connected between two blocks of the ground, there must be a CDM Tri in the input side bl different between PHY digital and LINK, CDM _ Trs should be attached to the PHY digital port when the LINK s
Is the VSS_CDM port added between IP and SOC Ground and proper back-to-back diode is used? Did the met the guide of ESD team?

Did you perform PERC in Top Netlist? Attach the result and check whether the error can be corrected. (PERC execution is required with the top netlist created in DR1. PERC execution is required with the final ne
Did you use the LB layer as a power mesh through direct via drop? Why not?
If the LB layer was used as power mesh, did the ESD 1ohm rule be performed?
Did you perform the Apache Current Density Check Simulation?
Is there any error when performing DRC and EAC? If so, did you get an ESD waive?
Has the ESD review been requested to ESD team and completed review? (Detailed ESD check is performed on the TOP sheet)
Package review request is required for packaging. To this end, the GCM code is created and recorded in Deta
If it is an MPW test chip, the package review request is requested and the result should be notified. Attached Did you get it?
Did you receive the package model and proceed PI / SI simulation?
Does the quality team proceed with IP Qual (HTOL) with MPW test chip?
In IP qualification, did the test board information be shared with the quality team?
Has the datasheet been created? (Done before IP LR is required.)
Has the Test Plan been created? (Done before IP LR is required.)
Has the User Guide been created?
Are you aware that the IP document should be released through IMS?
Do you know that DB release should be done through IMS? (FTP prohibited)
Are you familiar with the structure and delivery for uploading IMS DB?
Do you know that DB should be uploaded using IMS DB sanity checker tool?
Do you know that when LINK DB release, it should be released with PHY? (Because of PHY version management, PHY verilog model used for verification during LINK DB release is the Recognition PHY, LINK team needs cross-check.)
Describe the SPICE model version used in the design.
Describe the DK version used in the design. (PHY digital)
Describe the PDK version used in the design. (OPUS library device)
Describe the PDK verison of the IO / power / break / linker cell and bi-directional diode used in the design.
Describe the version and cell name of HSIO used in the design.
Describe the simulator version used in the design.
Describe the DRC / LVS / EAC / RCXT runset version used for verification.
Describe EM tech files and TOTEM versions used in the design.
Describe the Polaris runset version used in Reliability sim.
Describe the verilog simulator version used in the design.
Is the block name / port name, etc. following the DIPD internal rule?
Check if the netname _ RCXT is attached to the interface signals that must be RCXT at Top Sim.
When using TSPC, make sure that it operates at a frequency that is as slow as 1 / 10 of the operating freque
Mark the places where cross-coupled inverters are used between complementary signals, and check if leaka down mode. How to prevent leakage currents is 1) Complementary signal output becomes complement even in the PD or becomes tri-state in the PD.

If the regulator control block is under the regulator again, there is a problem such as not being reset depend regulator. With the voltage generated by the regulator, it checks and records for all the indicators within the ON / OFF.
Is there any pin that is not used in the product? If there is any process, please record the value of power dow pin leakage if there is no current path.
Displays all where the ncap was used. Ncap has a large capacitance value but has a large gate leakage, so it high-Z node such as PLL Loopfilter. If Amp's compensation cap is used, it should be checked if the gap resist leakage does not affect the gain or availability of the amp again. The easy way is to simulate the resistance case overlap (ten times) on both ends of the ncap.

	Number
완료 (OK)	0
미진행	56
해당사항없음	0
불충분	0
진행중	0
완료율 (%)	0/56

Designer Name	Reviewer	Check
		미진행
		미진행
		미진행
		미진행
		미진행
		미진행
		미진행
		미진행
		미진행
		미진행
		미진행
		미진행
		미진행
		미진행
		미진행
		미진행
		미진행
		미진행
		미진행
		미진행

		미진행
		미진행
		미진행

		미진행
		미진행
		미진행

Percentage
0%
100%
0%
0%
0%
0%
Comments(Due date/ResultFile)

6.3 Library_DFD_review

Category	Sub Category	Item
1.Design For Debug	1.Digital Flag	1. DIGITAL_FLAG_REGISTER_MAPPING
		2. r_PLL_LOCK_DONE
		3. r_PLL_AFC_DONE
		4. r_PLL_AFC_CODE
		5. r_TX_RCAL_DONE
		6. r_TX_RCAL_CODE
		7. r_RX_RCAL_DONE
		8. r_RX_RCAL_CODE
		9. r_CDR_AFC_DONE
		10. r_CDR_AFC_CODE
		11. r_CDR_LOCK_DONE
		12. r_OFFSET_CAL_DONE_EQ
		13. r_OFFSET_CAL_CODE_EQ
		14. r_OFFSET_CAL_DONE_SQ
		15. r_OFFSET_CAL_CODE_SQ
		16. r_OFFSET_CAL_DONE_CDR_SAMPLER
		17. r_OFFSET_CAL_CODE_CDR_SAMPLER
	2.Analog monitor	1. m_dc_TX_VREG_OUT
		1. m_dc_RX_VREG_OUT
		2. m_clk_PLL_FEEDBACK_CLK
		3. m_clk_REC_CLK_MON
		4. m_clk_REF_CLK_JITTER
		5.m_dc_BGR_OUT
		6. m_EYE_MONITOR
		7. m_CDR_RECOVERED_CLOCK
		7. m_CDR_BB_OUTPUT

	3.Control option	1. c_RCAL_OFFSET_CONTROL
		2. c_RCAL_PN_SKEW
		3. c_RECOVERED_CLOCK_FOR_TX_CLK
		4. c_RESET_FOR_EACH_BLOCK
		5. c_TXP_N_AND_RXP_N_POLARITY_INVERSION
		6. c_BIST_PATTERN

No
1.1.1
1.1.2
1.1.3
1.1.4
1.1.5
1.1.6
1.1.7
1.1.8
1.1.9
1.1.10
1.1.11
1.1.12
1.1.13
1.1.14
1.1.15
1.1.16
1.1.17
1.2.1
1.2.2
1.2.3
1.2.4
1.2.5
1.2.6
1.2.7
1.2.8
1.2.9

1.3.1
1.3.2
1.3.3
1.3.4
1.3.5
1.3.6

- **Customer:**
- **IP Name:**
- **Process:**

Check Point
All digital flags described below must be mapped to each register and accessible to the register through the names have r _ as prefix)
The PLL_LOCK_DONE signal indicating the status for the PLL lock must be enabled.
The AFC_DONE signal indicating the status of PLL AFC must be enabled.
When the AFC of PLL is completed, the corresponding AFC value must be readable.
The TX_RCAL_DONE signal indicating the completion status of TX RCAL must be enabled.
TX RCAL value should be readable.
The TX_RCAL_DONE signal indicating the completion status of RX RCAL must be enabled.
RX RCAL value should be readable.
The AFC_DONE signal indicating whether AFC of CDR is completed must be enabled.
When the AFC of CDR is completed, the corresponding AFC value must be readable.
The CDR_LOCK_DONE signal indicating the status of the CDR lock must be enabled.
The OFFSET_CAL_DONE_EQ signal indicating whether EQ's offset calibration is complete must be enabled.
The calibration code value should be readable when offset calibration of EQ is completed.
The OFFSET_CAL_DONE_SQ signal indicating whether the offset calibration of the Squelch Calibration (SQ) is
The corresponding calibration code value must be readible when the offset calibration of SQ is completed.
The OFFSET_CAL_DONE_SQ signal indicating whether the offset calibration of the CDR sampler is completed
When the offset calibration of the CDR sampler is completed, the corresponding calibration code value must
If TX Voltage Regulator is used inside, the TX regulator output voltage levels must be monitored.
If RX Voltage Regulator is used inside, the TR regulator output voltage levels must be monitored.
The feedback clock applied to the PFD is connected to the outside with GPIO so that it can be monitored.
The reference clock applied to the PFD is connected to the outside with GPIO so that it can be monitored.
Connect the reference clock applied to the PHY directly to the TX driver to measure the jitter of the referenc
It should be able to monitor the output voltage levels of BGR.
The eye of the incoming input data should be monitored (in case of Termination, CTLE, and DFE)
It allows the recovered clock of the CDR to be observed through the loopback path and TX driver. This obser much margin the lock value of the CDR has by observing the frequency, jitter component, etc. of the clock.
The output of the BB PD must be monitored through the loopback path. When half rate CDR is used, the outp even and odd data. Each data must be able to be observed through the loopback path and TX driver. In the PRBS7 that was originally applied and the sequence that observed only even data (or odd data) are the sam check if there is a problem with the operation of the CDR or the timing of the deserializer at the back stage

Offset should be able to be applied to the Automatically RCALed value. For some reason, it is necessary to a measured values by a certain amount for when the RCAL value is not correct or the target RCAL value needs
When applying offset values after manual setting and automatic calibration, PNs must be set differently. This control of intra-pair skews, etc.
The recovered clock is used in the CDR instead of the clock from the PLL so that data transmission can be pe the TX / RX frequency domain in the BERT equipment, or to monitor the receiving clock.
All blocks that use the reset signal must be able to adjust the reset signal independently through I2C or APB also required, but resets that are independently controlled by different blocks and different timings are usefu workarounds. For example, the function that can control the set of blocks that supply the clock of Sigma delt the PLL to change to the integer seamlessly while operating in fractional-N mode during PLL operation. (Sinc block is freezed, phase shift does not occur because the sigma delta does not move and the current phase v
For convenience of PCB or routing design, polarity of TXP / TXN, polarization of RXP / RXN can be inverted. Th N is to reverse the polarization of TX data. Similarly, the way to flip RXP / RXN is to flip the value when taking data from RX digital logics. However, in the case of MPHY, the results of DIF-P swapped and the PWM must also be inverted in the process of restoring.
BIST pattern must include PRBS7 and 40bit user pattern. The reason why 40bit is required is to prevent crea domain (20to20), and the user pattern should be applicable using the desired value in the register.

	Number
완료 (OK)	0
미진행	32
해당사항없음	0
불충분	0
진행중	0
완료율 (%)	0/32

Designer Name	Reviewer	Check
		미진행
		미진행
		미진행
		미진행
		미진행
		미진행
		미진행
		미진행
		미진행
		미진행
		미진행
		미진행
		미진행
		미진행
		미진행
		미진행
		미진행
		미진행
		미진행
		미진행
		미진행
		미진행
		미진행
		미진행
		미진행

		미진행
		미진행
		미진행
		미진행
		미진행
		미진행

Percentage
0%
100%
0%
0%
0%
0%
Comments(Due date/ResultFile)

7.1 IP Specific(DPHY)

Category	Sub Category	Item
	IP Integration	1. PLL clock path check
		2. Loopback path check
		3. TX_SERCLK/TX_DATARDY check
		4. M_VREG0P4V routing check
		5. Power mesh check
		6. DP/DN signal routing check
		7. TxdataRdy_out connection check
		8. Primitive cell orientation check
		9. P&R block power mesh check
		10. I/O filler check
		11. LEF check
		12. DB list check
		13. Special function port check
		14. Internal loopback truth table

		15. RxDDRCLK loading check
		16. MSC PLL version check
	TOP Analog Simulation	1. Netlist check
		2. HS Tx
		3. LP Tx
		4. HS Internal loopback
		5. HS External loopback
		6. Leakage check
		7. LP RX

MIPI D-PHY		
		8. CPHY_RX_ABC_SKEW
		1. Netlist check
		2. Scan Function
		3. Master Clock Lane - HS, ULPS
		4. Master Data Lane - HS
		5. Master Data Lane - ULPS, LPTX0, Trigger0

	TOP Digital Simulation	
		6. Master Data Lane - LPRX0, LPCD0
		7. Slave Clock Lane - HS, ULPS
		8. Slave Data Lane - HS
		9. Slave Data Lane - ULPS
		10. Loopback test
		11. Skew Calibration test
		12. CPHY_RX_ABC_SKEW

■ **Customer:**
■ **IP Name:**
■ **Process:**

Check Point
PLL _ SERCLK (PLL- > M _ CLK _ clock serializer) is routed to the shortest distance and how long is it?
Has shielding been processed for PLL _ SERCLK?
How far is it between PLL _ SERCLK and shielding?
Is the loading value of PLL _ SERCLK within 100fF? (Need to consider power metal)
Is it routed to the shortest distance? (There should be no unnecessary stub when marking net)
Has Shielding been processed?
How much is the loading value and how much is reflected in the schematic for top simulation?
What is the total metal resistance value of the structure (L4LP / L6LP) routing metal using the existing switch
Is it routed to the shortest distance? (There should be no unnecessary stub when marking net)
Has Shielding been processed?
How much is the loading value and how much is reflected in the schematic for top simulation?
Is power mesh sufficient? (3um * 6 ea, with minimum 2 metal layers)
Is the resistance of the part where the power mesh is connected to the HS driver within 0.5 ohm? (Check the thickness)
Is the power mesh sufficiently connected to the cap.
Is the power Mesh (VDD / VSS) well connected between each sub-block? How did you confirm this?
Is the power Mesh (VDD / VSS) well connected between each assembly? (All mesh should be connected with
DP / DN < - > Is metal routing between I / O symmetrical and satisfies EM rule? (> 3mA)
Is the DP / DN port, HS driver, Serializer placement and connection in the master lane the shortest distance?
Did more than one VIA be used during signal metal connection? (Need to check important signal)
Is the TxdataRdy _ out of the master data0 lan connected to the TXDATARDY _ D0 of the master clock lane?
In the case of a primitive cell, is ploy orientation the same in one direction? (Corresponding to L65LP or less
Did you check the power Mesh connection to the PnR block? (Check the power connection status for the pow
If the IP includes I / O, is the filler cell exactly filled in the cell drill on both sides of the IP? (It is necessary to check cell leakage ry in the provided LEF)
If the LEF is provided first, is the same as the port position of the LEF provided with the port location of the fi
Did you record the final completed DB in the DB list excel file in CC? (Schematic and GDS location) (File location: 01 _ Design / 01 _ Project / MIPI _ DPHY / 40 _ MIPI _ Core _ DB / *. exl)
Is the contents of the special function port (ex. PDB _ VDDAONLY 2.8V power domain) shared with digital eng
Have you written the truth table for the internal loopback? (See Attachment 1), did you fill out the table for c necessary?

How much is the loading of RxDDRCLK and is there no unnecessary stub?
Did you confirm that the latest DB was used by downloading the MSC PLL in the IP from the IMS?
Is simulation performed using a netlist that reflects a parastic cap or selected net? (clock path, loopback pat
Is there any problem with TX data (serial data) and TX signal level? (100mV/300mV)
Check if the HX TX leakage output is stabilized within 200ns. (Within 90% of 400 mV)
Check if glitch or abnormal waveform does not appear in the DP / DN output during LP-TX - > HS-TX?
Is there any problem with Tr / Tf of signal in TX _ SERCLKHS / TX _ DATARDY signal path? (Tr / Tf < 300ps @ contain parastic cap component on schematic.)
Did you specify the appropriate value for the block requiring accuracy in the config file?
When LP TX data OUT, there is no problem with signal level and is the rise / fall slot symmetrical? (0V/1.2V)
Is the LP DT function working normally?
Did you check if the time at which BIAS _ EN is fully stabilized is secured on the inital sequence before ordered with PLL _ EN? (Lane means that the bias of the whole IP should be fully enabled and enabled. When BIAS and Lane are t TX output is distorted and output and needs to be set in advance for stability)
Did you check if the Lane bias is stabilized during Lane enable after BIAS is stabilized and the LP TX o distortion? (When Lane enable is turned on, Lane bias and LP TX are turned on at the same time, so there is TX output. Even if Tr / Tf is increased by 25ns or more, it is necessary to check whether it is set quickly to 1.
Does TX data and RX data match in Loopback mode?
Is there any Tr / Tf problem of the signal in the internal loopback signal path? (Tr / Tf < 300ps @ wst case parastic cap component on schematic.)
Does TX data and RX data match in Loopback mode?
What is the power value for each lane at 500Mbps? (NN, Vtyp, 25') (FF, Vtyp* 1.1, 125) (SS, Vtyp*0.9, -40)
What is the power value for each lane in 1000Mbps? (NN, Vtyp, 25') (FF, Vtyp* 1.1, 125) (SS, Vtyp*0.9, -40)
Is there any problem with the function during operation at 1000Mbps (SSF, Vtyp * 0.85, -55)?
Did you check the floating node during Power Down through Nanosim? (M_SHUTDOWN/OUT/results.err)
What is the power value for each lane in the power down mode? (Use finesim or hspice because the result o (NN, Vtyp, 25') (FF, Vtyp* 1.1, 125) (SS, Vtyp*0.9, -40) (FF, Vtyp, 85)
When Nanosim, did the current resolution proceed below pA? (The correct value is finesim or hspice) (If this value is too high, the power down current is small and the exact value does not appear)
Check the following simulation for Input Skew (1) Did you check with sweets with 0 ~ 20ns skew? (P tr = 2ns, N tr = 2ns, sweep step 0.5ns, tr / tf is based on 15 ~ 85%, skew is 645mV based timing skew) the ESC CLK due to the skew between P / N can be broken and malfunctioning during mode switching, the ch (2) Conduct the same simulation by fixing N and sweeping P 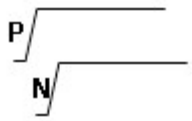

Check input signal Slope/Noise/Glitch tolerance
In the situation where P is immediately uploaded (P tr = 2ns), did you check if glitch is normal after glitch is
1.2Vets, 20ns) and 20ns high pulse is maintained (0 to 1.2V pulse, 84ns)? (We want to check whether RX r
the waveform coming from TX is strange even if it breaks the spec under the environment with noise.)

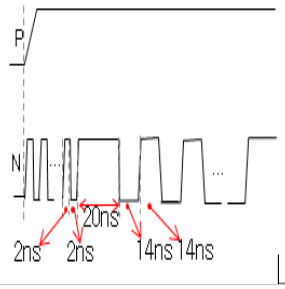

Check with post simulation whether skew occurs between ABC outputs. Check the waveform of the entire
the analog input pin, check the skew occurrence section, and feed back to the digital side when the pro
internal loopback problem is possible.

Did simulation be performed using the post netlist and real simulation model where PnR was performed? (all

Did you check that the function simulation and pre / post netlist simulation results are the same for all cases

Is the test coverage more than 90% as a result of the top scan function? (Due to IP characteristics, DT does

Is top simulation possible with test bench extracted with Tetramax?

When TxRequestHSClk becomes active (1), is it TxClk _ HS _ EN = 1 after LP-01 = > LP-00 Driving?

Did you check that TxClk _ HS _ ZERO = 0 and TxReadyHSClk = 1 after 8UI in HS-0 after LP-00?

When TxRequestHSClk becomes inactive (0), did you check that TxClk _ HS _ ZERO = 1 and then TxReadyHS

When TxUlpsClk = 1, after LP-10 = > LP-00 Driving, is UlpsActiveNotClk = 0 and Clk _ LPTX _ Ulps = 1?

Did you check that UlpsActiveNotClk = 1 after LP-10 when TxUlpsExit = 1 in ULPS mode?

Did you confirm that TxUlpsExit = 1 has inactive (0) TxUlpsClk after 1ms (at least 200us) and LP-11?

When the TEST _ MODE is set, did you check that the above signals appear normally through TEST _ OUT?

When TxRequestHSClk & TxRequestHS becomes active (1), is it TxData _ HS _ EN = 1 after LP-01 = > LP-00

Did you check that TxReadyHS = 1 at the same time as sync data (00011101) transmission after HS-0 drive

Did you check that TxDataHS [7: 0] is serialized and displayed as DP: DN?

Did you confirm that when TxRequestHSClk becomes inactive (0), it is transmitted during THS _ TRAIL?

Did you check that TxData _ HS _ En = 0 after Trail data and then LP-11?

When the TEST _ MODE is set, did you check that the above signals appear normally through TEST _ OUT?

Did you check that when TxRequestEsc and TxUlpsEsc are active (1) at the same time, LP-10 = > LP-00 = >

Did you confirm that LP-00 drive, UlpsActiveNot = 0 after transmitting ULPS cmd (00011110)?

Did you check that UlpsActiveNotClk = 1 after LP-10 when TxUlpsExit = 1 in ULPS mode?

Did you confirm that TxUlpsExit = 1 has inactive (0) TxRequestEsc after 1ms (at least 200us) and LP-11?

When TxRequestEsc & TxUlpsEsc active and ForceTxStop mode is active (1) after 22 * TLPX, did you check t
immediately performed?

Did you check that when TxRequestEsc and TxLpdtEsc are active (1) at the same time, LP-10 = > LP-00 = >

Did you check that LPDT cmd (11100001) is LP-00 drive and TxReadyEsc = 1 after transmission?

Did you confirm that StopState = 1 after TxRequestEsc becomes inactive (0)?

TxRequestEsc 와 TxTriggerEsc[?] When active (1) at the same time, did you confirm that LP-10 = > LP-00 =

Did you confirm that if TxRequestEsc is inactive (0) after transmitting Trigger cmd (01100010), it becomes L

When the TEST _ MODE is set, did you check that the above signals appear normally through TEST _ OUT?
Did you check LP-10 = > LP-00 = > LP-10 = > LP-00 after TurnRequest active (1)?
Did you check Tx _ LP _ EN = 0 after LP-00 4 * TLPX and then Direction = 1 and Stopstate = 1?
Did you confirm that ErrContentionLP0 = 1 by forcing M _ DPDATA / M _ DNDATA in Bi-Direction mode?
When the TEST _ MODE is set, did you check that the above signals appear normally through TEST _ OUT?
When LP-01 = > LP-00, did you check RxClkActiveHSClk = 1, Clk _ HSRX _ Enable = 1?
When LP-11 is detected in HS mode, did you check StopState = 1, RxClkActiveHSClk = 0, Clk _ HSRX _ Enabl
When LP-10 = > LP-00, did you check UlpsActiveNotClk = 0, RxUlpsClkNot = 0, Clk _ LPRX _ Ulps = 1?
Did you check UlpsActiveNotClk = 1 when LP-10 is detected in ULPS mode and then RxUlpsClkNot = 1 and S
When attached to TX, did you check that the HS clock operates normally?
When attached to TX, did you check that the slave normally enters and exits ULPS according to the ULPS sec
When the TEST _ MODE is set, did you check that the above signals appear normally through TEST _ OUT?
Did you check RxActiveHS = 1 and Data _ HSRX _ Enable = 1 when LP-01 = > LP-00?
Did you check that the Sync data is properly received and the HS mode is entered?
Did you check that ErrSotHS = 1 when Sync data is not entered properly?
DP: Did you check that DN is deserialized normally with RxDataHS [7: 0]?
When LP-11 is detected in HS mode, did you check StopState = 1, RxActiveHS = 0, Data _ HSRX _ Enable =
When attached to TX, did you confirm that the HS sequence operates normally and that the HS data has the
Did you check RxUlpsEsc = 1, UlpsActiveNot = 0 when LP-10 = > LP-00 = > LP-01 = > LP-00?
When LP-10 is detected in ULPS mode, did you check UlpsActiveNot = 1 and then StopState = 1 at LP-11?
When attached to TX, did you check that the slave normally enters and exits ULPS according to the ULPS sec
When the TEST _ MODE is set, did you check that the above signals appear normally through TEST _ OUT?
If the number of master and slave are different, is loopback mux configured for GDS?
Did you confirm that the frequency of the serial clock according to the PMS value is suitable?
Did you check that the PLL lock done signal is displayed normally?
Did you check that LOOPBACK _ PASS appears when TEST _ IN is applied while TEST _ MODE is set?
Did you set the skew calibration enable and M _ DPHYCTL / S _ DPHYCTL values properly?
Does TX / RX proceed with skew calibration function according to the entered control (timing, enable, select)
Did you check that the SkewCal _ done signal appears normally after Skew calibration?
Did you check if the loopback test works normally after proceeding with the skew calibration function?
Check with post simulation whether skew occurs between ABC outputs. Check the waveform of the entire the analog input pin, check the skew generation section, and correct it. Manage below Max < 20ps. Check is also checked in that state.

Simulation Result value	Designer Name

	Number
완료 (OK)	0
미진행	110
해당사항없음	0
불충분	0
진행중	0
완료율 (%)	0/110

Reviewer	Check
	미진행
	미진행
	미진행

	미진행
	미진행
	미진행
	미진행
	미진행
	미진행
	미진행
	미진행
	미진행
	미진행
	미진행
	미진행
	미진행
	미진행
	미진행
	미진행
	미진행
	미진행
	미진행
	미진행
	미진행
	미진행

	미진행
	미진행
	미진행

	미진행
	미진행
	미진행
	미진행
	미진행
	미진행
	미진행
	미진행
	미진행
	미진행
	미진행
	미진행
	미진행
	미진행
	미진행
	미진행
	미진행
	미진행
	미진행
	미진행
	미진행
	미진행
	미진행
	미진행
	미진행
	미진행
	미진행
	미진행
	미진행
	미진행
	미진행

Percentage
0%
100%
0%
0%
0%
0%
Comments(Due date/ResultFile)

7.2 IP Specific(MPHY)

Category	Sub Category	Item
MIPI M-PHY	Top Integration	1. PLL clock path check
		2. Loopback path check
		4. Driver routing check
		5. Power mesh check
		6. DP/DN signal routing check
		7. Primitive cell orientation check
		8. P&R block power mesh check
		9. I/O filler check
		10. LEF check
		11. DB list check
		12. RX Path Check
		13. TX_VREG0P4V routing check
		14. TXDP/TXDN and RXDP/RXDN signal routin

	Top Analog Simulation	15. TX
		16. RX
		17. Refclk IO
	Top Digital Simulation	Common
		APB
		Start-up Sequence
		1. Netlist check
		2. Scan Function
		3. Common
		4. TOP Analog Simulation

- **Customer:**
- **IP Name:**
- **Process:**

Check Point
Is routing metal of PLL_SERCLK from PLL to serializer minimize? And how much length?
Is there shielding on PLL_SERCLK?
How much distanc from PLL_SERCL to shielding?
Is loading cap of PLL_SERCLK less than 100fF?(Include power metal)
Is routing metal minimize? (must not be unnecessary stub)
Is there shielding?
How much load cap? Is it applied to schematic for top simulation?
What is total resistance of the routing metal
Is Power Mesh enough? (IR drop check)
Is Ground Mesh enough on drain and source of Current source?
Is connection enough from Power mesh to Cap?
Is the power mesh (VDD / VSS) connected to each sub-block well? How did you check this?
Is the Power Mesh(VDD/VSS) connected to each lane well? (All meshes should be connected with top metal)
Is the metal routing between DP / DN <-> I / O symmetric and meets EM rule? (> 3 mA)
Did you use more than one VIA for signal metal connection? (Significant signal required)
In case of Primitive Cell, is the ploy orientation the same in one direction? (For processes below L65LP)
Did you check the power mesh connection to the PnR block? (Check whether power mesh is floating or conn
If the IP contains I / O, are the filler cells correctly filled in the cell boundry on both sides of the IP? (Need to check cell boundry in provided LEF)
Check the port location of the final GDS the same as the port location of the provided LEF when the LEF is pr
Did you use LAY-Common provided by Layout team for the final DB?
Is there a loopback from the RX AFE to the TX driver and is it connected at the shortest distance?
Did you check the EQ output according to the signal amplitude and cable length to the RX? (Considering the
Is the CDM diode size of the RX input pad determined in consideration of operating speed?
Is connection enough from Power Mesh to TX driver?
Is connection enough from Power mesh to Cap?
Is the TX Vreg voltage variaion within 50mV with PRBS7 data pattern is tranmsitted?
Is the metal routing between DP / DN <-> I / O symmetric and meets EM rule? (> 3 mA)
Is routing minimize to Pad or bump?
Is total width of Signal metal up to 5um?

What is the range of TX amplitude? (Spec: 360mV ~ 440mV)
Does TX de-emphasis level support -3.5dB?
Is there a problem with TX Tr / Tf? (Tr / Tf <80ps @wst case, parastic cap must be included in schematic in t
Is there a loopback from the RX AFE to the TX driver and is it connected at the shortest distance?
Did you check the EQ output according to the signal amplitude and cable length to the RX? (Considering the
Is the CDM diode size of the RX input pad determined in consideration of operating speed?
Check the reference clock parameter VIH / VIL (0.65 * VCCQ / 0.35 * VCCQ) level specified in the UFS Spec.
Check the VCCQ (1.14V ~ 1.26V) range, the reference clock parameter specified in the UFS spec, and attach
All signals should not be "X/Z"
APB Write/Read simulation is passed.
CMU Start-up sequence
TRSV Start-up sequence
Did the simulations be performed using PnR-post netlist and real analog model? (all function)
Is result of Top scan function up to 97% about test coverage?
Is top simulation possible with a test bench extracted with TetraMax?
Is enable / reset asserted appropriately for state-specific flag signals (afc_done, pll_lock_done)?
Even if the flag signal is not set to 1'b1, can individual blocks be operated by asserting the forced enable / re
Did the pulse generator logic for the fast bias settle work correctly?
Check that the forced pulse generation logic is working correctly.
Check the flag signal (afc_done, pll_lock_done) is set to 1'b1 for each state?
Check the flag signal is a toggle, after it is set to 1'b1.
Check clock is stable for each settiing, after pll_lock_done=1'b1.
Check timing scheme is correct between Link-PHY and PHY digital-analog of main data path.
Check phase inversion option is work correctly.
Does clock frequency change correctrly according to data rate?
Check lsb of parallel data is outputted first on TXP / N?
Check clock inversion option inversion option is work correctly.
Normal BIST with Error Injection
Check error indication logic is work correctly, when injecting an error into the data input by compare logic.

Simulation Result value	Designer Name

	Number
완료 (OK)	0
미진행	58
해당사항없음	0
불충분	0
진행중	0
완료율 (%)	0/58

Reviewer	Check
	미진행
	미진행
	미진행

	미진행
	미진행
	미진행

Percentage
0%
100%
0%
0%
0%
0%
Comments(Due date/ResultFile)

7.3 IP Specific(PCIe-Gen4)

Category	Sub Category	Item
	1. TX	1. DRVR_MAX_AMP
		2. DRVR_EMP_GEN1_3.5dB
		3. DRVR_EMP_GEN2_3.5dB
		4. DRVR_EMP_GEN2_6dB
		5. DRVR_EMP_GEN3/4
		6. DRVR_LF_AMP
		7. DRVR_AC_VCM
		8. DRVR_DC_VCM_DIFF
		9. EI entry time
		10. EI exit time
		11. DRVR_RX_DETECT
		12. TX_RL
		13. TX_TRF
		14. TX_BIFURCATION
		1. ERIO_AMP

	2. ERIO	2. ERIO_TRF
		3. ERIO_IMPEDANCE
		4. ERIO_HYSTERESIS
		5. ERIO_ICM
		6. ERIO_SEQ
		7. ERIO_CLK_GATING
		8. ERIO_PD
		9. ERIO_GLITCH_FREE
	3. RX	1. RX_RTERM

- **Customer:**
- **IP Name:**
- **Process:**

Check Point
Check the swing range is 800-1300mV in Gen4, and note the maximum swing. (refer to 4_Block_sim > 5.1.1
Check if it supports -3.5dB de-emphasis in PCIe Gen1. Be sure to consider TX bit duplication. (If TX does not ignore it.)
Check if it supports -3.5dB de-emphasis in PCIe Gen2. Be sure to consider TX bit duplication. (If TX does not ignore it.)
Check if it supports -6.0dB de-emphasis in PCIe Gen1. Be sure to consider TX bit duplication. (If TX does not ignore it.)
in 16Gb/s operation, sweep TX amplitude, Pre-Shoot, De-Emphasis level with lone-bit pattern and match the maximum Pre-shoot and maximum De-Emphasis in dB scale. (refer to PCIe Base 4.0 v1.0 Table 8-3)
Measure TX amplitude in Preset 10 with 1GHz pattern (assume EIEOS pattern) and check the voltage level is 250mVpp. (refer to PCIe 4.0 v1.0 Figure 8-9) This is to check the transmitting swing is large enough to opera sending EIEOS.
Check if the peak-to-peak voltage of AC common-mode is less than 150mVpp (in all frequency range), and it Gen3/4, less than 100mVpp in Gen2 when applied low pass filter which has a bandwidth of half of each data
Check the difference of the DC common mode voltages in transmitting high-speed data (L0) and in Electrical matters in DC common-mode voltage when transmitting high-speed data, and leakage current matters in DC Electrical Idle mode, therefore simulate them with all worst cases.
Check if TX goes into Electrical Idle state within 8ns after EIOS signal. EI_EN should be changed to 1 when th is off. Measure the time difference from the last bit of EIOS symbol at TXDP/N to when the common-mode vo 5mV, and it should be less than 8ns.
Check if EIEOS pattern is transmitted within 8ns after releasing Electrical Idle. Measure the time difference fr released to when the first bit of EIEOS symbol is out from TX output, and it should be less than 8ns.
Run receiver detection simulation and check when comparater output switches depending on the receiver re connected far side of AC coupling cap. Check the max voltage change of TXDP/N is less than 600mV, and ch in positive direction. (From RX RTERM spec, it should be equal to or larger than 10Kohm in positive direction larger than 1Kohm in negative direction; therefore, running in negative direction is not a good choice.)
Check the differential/common-mode return loss including HSIO, Package model, and T-coil. (refer to PCIe Ba
Check if there is a way to reduce the slope of the TX output waveform to meet TX tr/tf spec which is la reverse the direction of AC-cap driver)
-
Check the min/max amplitude of External Reference Clock I/O in TX mode, check if it meets the PCIe specifi a table.

Measure TR/TF with 2pF load cap at EXT_REF_CLKP/N port in TX mode of External Reference Clock I/O a specification.
Check if the output impedance of the External Reference Clock I/O in TX mode meets the specification in the best setting in SFR map.
Measure the hysteresis level in RX mode of External Reference Clock I/O and show it as a form of a table.
Check the common-mode voltage of input clock in RX mode of External Reference Clock I/O, and check if it r
Is analog-digital power-up/down sequence considered for clock output to be used as a EP 10 PLL? (refer to the EDM link on the right cell)
Is it ok to provide well-locked 100MHz clock during rate change or powerdown mode exit whe 100M reference clock of PHY PLL? (refer to the EDM link on the right cell)
Check if those settings are selectable in TX mode of External Reference Clock I/O. Check this with IP owner c 1. output clock gating is enabled/disabled before PLL lock done. 2. EXT_REF_CLKP/N is selected to be 0/0 or 0/1 during output clock is disabled (before PLL lock or during pow
Check if there is a glitch during rate change or at the moment of PLL lock done when PHY PLL a 100M reference clock. (refer to the EDM link on the right cell)
Check if there is a glitch during rate change or at the moment of PLL lock done when PHY PLL and SYS PLL is clock.

Simulation Result value	Designer Name

	Number
완료 (OK)	0
미진행	24
해당사항없음	0
불충분	0
진행중	0
완료율 (%)	0/24

Reviewer	Check
	미진행
	미진행
	미진행
	미진행
	미진행
	미진행
	미진행
	미진행
	미진행
	미진행
	미진행
	미진행
	미진행
	미진행
	미진행

	미진행
	미진행
	미진행
	미진행
	미진행
	미진행
	미진행
	미진행
	미진행

Percentage
0%
100%
0%
0%
0%
0%
Comments(Due date/ResultFile)

7.2 IP Specific(HDMI)

Category	Sub Category	Item
	IP Integration	1. PLL clock path check
		2. Loopback path check
		4. Driver routing check
		5. Power mesh check
		6. DP/DN signal routing check
		7. Glitch free mux
		8. Primitive cell orientation check
		9. P&R block power mesh check
		10. I/O filler check
		11. LEF check
		12. DB list check
	TOP Analog Simulation	1. Netlist check
		2. leakage when Power off (Not Power down).
		3. Main driver reliability check
		4. PCG
		5. TMDS clock
		6. PLL
		7. Serializer
		8.BIST

HDMI TX PHY		4. HS Internal loopback
		6. Leakage check
		1. Netlist check
		2. Scan Function
		3. Common
		4. Main data path
		5. Internal loopback
		6. SFR setting

- **Customer:**
- **IP Name:**
- **Process:**

Check Point
Is PLL_SERCLK (PLL- > serializer) is routed with the shortest distance? How long is it?
Is PLL_SERCLK shielded?
What is the distance between PLL_SERCLK and shielding?
Is the loading capacitance of PLL_SERCLK smaller than 100fF? (consider power metal also)
Does it routed with the shortest distance? (There should not be stub when mark net)
Is it shielded?
What is loading capacitance? Is the loading when used in top simulation added in the schematic?
What is total resistance of the routing metal?
Does it have enough power mesh to avoid large IR drop? (check IR drop)
Does it have suffucient ground mesh at the drain or source of current source?
Are the power mesh and the capacitors connected well?
Are the power mesh of VDD and VSS connected to VDD and VSS of sub-block well? How was it checked?
Are the power meshs(VDD/VSS) of all lanes connected well each other? (It should be connected with top metal)
Is the matal routing between DP/DN and I/O symmetric? Does it meet EM rule? (>3mA)
Are more than two vias used in the case of signal metal connection?
Is glitch free mux used in TMDS/Pixel clock output?
Are the poly orientation of primitive cells all the same? (applicable to L65LP and finer process)
Is it checked connection between power mesh and power of PnR block?
(If IP include I/O,) Have the filler cells been filled properly at the cell boundry? (Cell boundry should be the one of LEF)
Are the port position of final GDS and LEF the same?
Is LAY-Common used in final DB provided from Layout team?
Have the simulation been performed using the netlist applying the parasitic capacitance and selected net? (clock path, loop
- Is the level of TXP/N okay In power-off (the power of HDMI Tx is not applied and VDD33 is applied)? (Avcc _/-10mV)
- Is there any reliability problem of transistors used in main driver?
- Have 8/10/12 bit mode of PCG been checked?
- Is it possible to deliver 40bit TMDS clock through TXCP/N in the resolution of more than 3.4Gbps?
- Have the simulations been performed with the resolutions of both fractional and integer mode?
- Is it possible to choose the high-speed clock in serializer among I-phase and Q-phase?
- Have the timing check with I-phase and Q-phase been done?
- Is the phase of Deserializer clock selected automatically?
- Is the clock delay for phase shift in Deserializer appropriate? (I pahse, I phase+delay, Q phase, Q-phase + delay)
- Are Tx data and Rx data the same in loopback mode?

- Is there any problem in Tr/Tf of signal in the internal loopback path? ((Tr/Tf < 300ps @wst case, parasitic capacitance signal path)
- Is there any skew between clock P and N, or data P and N?
~~- ■ Are there any Tr/Tf problems with the signal in the internal loopback signal path? (Tr / Tf <300ps @ws included in schematic in this signal path.)~~
- Is it checked for floating node in power down using Nanosim? (M_SHUTDOWN/OUT/results.err)
- What is the power consumption of each lane in power down mode? (It should be checked with Finesim or Hspice, because the accuracy of Nanosim is not sufficient) (NN, Vtyp, 25') (FF, Vtyp* 1.1, 125) (SS, Vtyp*0.9, -40) (FF, Vtyp, 85)
- Is the current resolution of Nanosim set to pA? (Finesim or Hspice are needed for more accurate results) (If that value is too high, it can not be obtained the accurate power down current results.)
Is the simulation performed with post netlist from PnR and real analog model? (all function)
- Is the test coverage from the top scal function results more than 97%?
- Is it possible to perform top simulation with the test bench extracted from TetraMax?
- Are enable/reset asserted with the flag signal(afc_done, pll_lock_done) of state?
- Is it possible to force the enable/reset signal in order to activate each block even though the flag signal is not set to 1'b1
- Does the pulse generator logic for fast bias settle operate properly?
- Has the operation of forced pulse generation logic been check?
- Has it been checked whether the flag signal(afc_done, pll_lock_done) is set properly according to the state?
- Has it been checked whether there is any toggle operation after flag signal is set to 1'b1?
- Has it been checked whether the stabilized clocks are proper after pll_lock_done or not?
- Has main data path been checked using the simulation of "TX Link-Tx PHY <-> Rx PHY - Rx Link"?
- Has it been ckecked whether the timing scheme of Link-PHY, PHY digital-analog in main data path is proper or not?
- Has it been checked whether bit order / phase inversion option of main data path operate properly or not?
- Has it been checked whether the LSB of parallel data is output firstly to the TXP/N or not?
- Has it been checked whether the de-skew block operate properly in normal state(the frequencies of two clocks are the s and the phases of them are different) or not?
- Has it been checked whether the de-skew block generate error indication properly in abnormal state(the frequencies ar phases of two clocks are different each other) or not?
- Has it been checked whether the pattern generated properly according to the mode or not?
- Has it been checked whether the clock inversion option works properly or not?
- Has it been checked whether the timing relation between BIST logic and analog block (posedge latch or negedge latch) is implemented as the one agreed with analog engineer?
- Check if retry sequence and error indication logic operates correctly when error is injected in input data to compre logic
- Has it been checked whether the APB slave operate properly according to APB specification 2.0 or not?
- Has it been checked whether the APB slave indicate abnormal state by making o_pready kept beeing 1'b0 in the abnor case of APB sequence assertion or not?
- Has it been checked whether the register can be accessed or not by accessing all registers?

Simulation Result value	Designer Name

	Number
완료 (OK)	0
미진행	61
해당사항없음	0
불충분	0
진행중	0
완료율 (%)	0/61

Reviewer	Check
	미진행
	미진행
	미진행

	미진행
	미진행
	미진행
	미진행
	미진행
	미진행
	미진행
	미진행
	미진행
	미진행
	미진행
	미진행
	미진행
	미진행
	미진행
	미진행
	미진행
	미진행
	미진행
	미진행
	미진행
	미진행
	미진행
	미진행
	미진행
	미진행
	미진행

Percentage
0%
100%
0%
0%
0%
0%
Comments(Due date/ResultFile)

7.2 IP Specific(eDP)

Category	Sub Category	Item
eDP Tx PHY	TOP Analog Simulation	1. Netlist check
		2. Driver regulator
		3. AUX
		7. Serializer
		8.BIST
		4.Internal loopback
		6. Leakage check
	TOP Digital Simulation	1. Netlist check
		2. Scan Function
		3. Common

		4. Main data path
		5. Internal loopback
		6. Bridge logic

- **Customer:**
- **IP Name:**
- **Process:**

Check Point
Was the simulation performed using a netlist with a parastic cap or a selected net? (clock path, loopback path, etc…)
Is there a power supply problem in the driver regulator?
Does the common mode turn around voltage meet the spec.
Does the common mode turn around voltage have an extra margin compared to the spec? How much marg
What is the maximum value about hysteresis in AUX RX?
Is there any problem with the reliability of AUX RX / TX?
Is there option that select I phase or Q phase for high-speed clock of Serializer.
Check timing betweed I phase and Q phase.
Is clock of Deserialiser designed auto phase selection?
Is clock delay proper for phase shift in Deserializer?
Are TX data and RX data consistent in Loopback mode?
Is there a Tr / Tf problem with the signal in the internal loopback signal path? (This signal path should conta parastic cap component in the schematic.)
Is there skew between positive and negative of Clock/Data in Loopback mode?
Is there a Tr / Tf problem with the signal in the internal loopback signal path? (Tr/Tf < 300ps @wst case, Thi path should contain the parastic cap component in the schematic.)
Did you check the floating node when power down mode with Nanosim? (M_SHUTDOWN / OUT / results.err)
What is the power consumption for each lane in Power Down mode? (Be sure to use finesim or hspice becau results of Nanosim are not accurate.) (NN, Vtyp, 25 ') (FF, Vtyp * 1.1, 125) (SS, Vtyp * 0.9, -40) (FF, Vtyp, 85)
What is the current resolution value when using Nanosim? (If this value is too high, the power down current small and the exact value will not be obtained.)
Is simulation performed with Post netlist(PnR) and real analog model?
Is result of Top scan function up to 97% about test coverage?
Is top simulation possible with a test bench extracted with TetraMax?
Is enable / reset asserted appropriately for state-specific flag signals (afc_done, pll_lock_done)?
Even if the flag signal is not set to 1'b1, can individual blocks be operated by asserting the forced enable / re
Did the pulse generator logic for the fast bias settle work correctly?
Check that the forced pulse generation logic is working correctly.
Check the flag signal (afc_done, pll_lock_done) is set to 1'b1 for each state?
Check the flag signal is a toggle, after it is set to 1'b1.
Check clock is stable for each settiing, after pll_lock_done=1'b1.
Check main data path with TX Link - TX PHY <-> RX PHY - RX Link simulation.

Check timing scheme is correct in Link - PHY, PHY digital - analog of main data path.
Check bit order / phase inversion option of main data path work correctly.
Check lsb of parallel data is outputted first on TXP / N?
Did you check whether the pattern for each mode is generated correctly?
Check Clock inversion option is word correctly.
Check timing between BIST logic and Analog block is consistent of agreement with the analog engineer.
Check Retry sequence and Error indication logic work correctly when inject an error into the data entered by
Check the PHY setting value decoded from the bridge digital is correctly input to the control port of the PHY
Check Bridge digital can generate 40bit user data pattern.
Check internal loopback between bridge logic and PHY is possible with BIST TX logic inside bridge digital.

Simulation Result value	Designer Name

	Number
완료 (OK)	0
미진행	38
해당사항없음	0
불충분	0
진행중	0
완료율 (%)	0/38

Reviewer	Check
	미진행
	미진행
	미진행
	미진행
	미진행
	미진행
	미진행
	미진행
	미진행
	미진행
	미진행
	미진행
	미진행
	미진행
	미진행
	미진행
	미진행
	미진행
	미진행
	미진행
	미진행
	미진행
	미진행
	미진행
	미진행
	미진행
	미진행
	미진행
	미진행
	미진행
	미진행
	미진행
	미진행

	미진행
	미진행
	미진행
	미진행
	미진행
	미진행
	미진행
	미진행
	미진행
	미진행

Percentage
0%
100%
0%
0%
0%
0%
Comments(Due date/ResultFile)

7.6 IP Specific(USB3_USBD

Category	Sub Category	Item
USB3	1. TX	1. DRVR_MAX_AMP
		2. DRVR_EMP_GEN1_3.5dB
		3. DRVR_EMP_GEN2
		4. DRVR_DC_VCM_DIFF
		5. DRVR_RX_DETECT
		6. TX_RL
		7. Normal Data, LFPS Signal Amplitude Contro
		8. LFSP_ENTRY_EXIT_AMP
		9. LFSP_BURST_PERIOD_GILTCH
	2. RX	1. RX_RTERM
		1. LFPS

)P)

Check Point
Check if swing 800-1200mV is satisfied for gen4 mode and check maximum configurable swing as well. (refe
Check if TX de emphasis of -3.5db is satisfied in usb gen 1 mode
Tabulate settings for 10 preset values of tx amplitude, pre-shoot, de-emphasis level by sweeping driver volta long bit pattern @ 10Gbps check maximum configurable pre-shoot and de-emphasis in dB (preset is not defined in USB3.1 Gen2, hence refer to PCIe Base 4.0 v1.0 Table8-3)
Check if the dc common voltage difference is within 100mV in both electrical idle mode and high-speed data dc common mode voltage is affected by amplitude settings in high-speed data transmission and it is affecte electrical idle mode, hence simulation should fully cover the worst case scenario
Note the change of comparator output toggling time due to resistance change(50ohm/1kohm) beyond ac co detection simulation and double check with pma digital engineer. check if txdp/n max voltage variation is within 600mV and if detection is in positive direction. (from RX RTER favored because it needs to be above 10kohm whereas at can be satisfied above 1kohm in negative directio
Check tx Differential/Common-mode return loss including HSIO, Package model, T-coil. (Preset is not define USB3.1 Gen2, hence refer to Figure 8-19, 8-20 in PCIe Base 4.0 v1.0)
Check if normal data amplitude and LFPS signal amplitude can be controlled separately
Check if amplitude is distorted when LFPS entry and EXIT. (distortion may be possible duringng ENRY du should be kept as minimal)
Check if burst/idle period indicated by LINK(PCS) is distorted in PHY because LFPS signals are transmitted t idle. (PING is tranmitted for only 2 cycles, hence possilility of glitch should be checked)
Check if R>20Kohm for positive voltage, R>1K for negative voltage are satisfied when RX RTERM off
-

- **Customer:**
- **IP Name:**
- **Process:**

Simulation Result value	Designer Name

	Number
완료 (OK)	0
미진행	11
해당사항없음	0
불충분	0
진행중	0
완료율 (%)	0/11

Reviewer	Check
	미진행
	미진행
	미진행
	미진행
	미진행
	미진행
	미진행
	미진행
	미진행
	미진행
	미진행

Percentage
0%
100%
0%
0%
0%
0%
Comments(Due date/ResultFile)

7.7 IP Specific(

Category	Sub Category
Common	1. Reliability & ESD
	2. Circuit Check Point Based on Error History
	3. Top level Simulation Check Item
	1. Vref

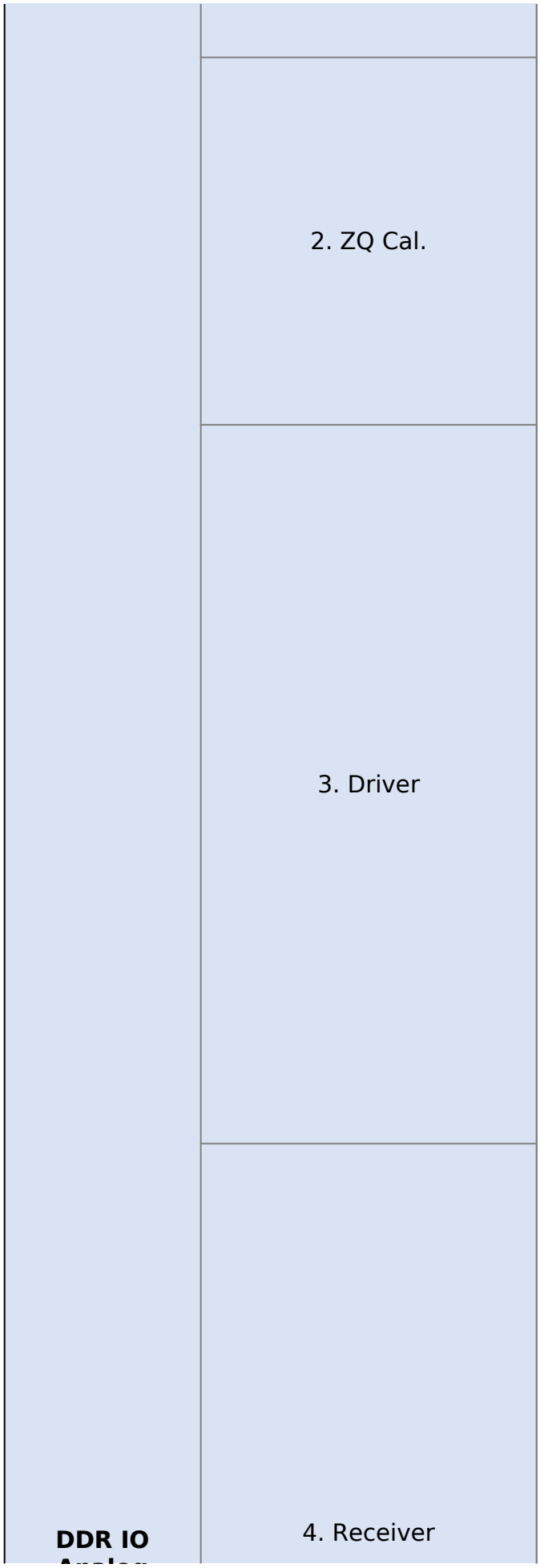
2. ZQ Cal.
3. Driver
4. Receiver
DDR IO

Analog	
	5. L2H Level-shifter
	6. H2L Level-shifter
	7. Weak Pullup-down
	8. CKE
	9. Verilog model Check
	10. Timing Check

	11. Power Check
	12. Top Level Implementation Check Item (IR/DR2)

(DDR_IO)

Item
1. Device reliability check
2. Floating node check
3. Pre ESD check at circuit level
4. Check signal/power EM
1. Extract verilog model
2. DQ receiver modeling (Critical DQ function)
3. Post simulation with RC extract netlist
4. PD pin control of VREF (Critical VREF function)
5. Check the reference voltage of ZQ (Critical ZQ function)
6. Check the device parameter for reliability
1. Function check at top level circuit
2. Offchip P/SI check
1. DDR_RESISTOR_LADDER_BIAS
2. DDR_VREF_SW_SIZE
3. DDR_UG_AMP
4. DDR_VREF_SETTING
5. DDR_VREF_IDS
6. DDR_VREF_OUT
7. DDR_VREF_DROP
8. DDR_VREF_PD
9. DDR_VREF_DROP_10X_LEK

10. DDR_VREF_DQS_CELL
1. ZQ_PU_PD_IMPEDANCE
2. ZQ_DRV_IMPEDENCE
3. ZQ_COMP_OFFSET
4. ZQ_COMP_SPEED
5. ZQ_IDS_PAD_STATE
6. ZQ_CAPITAL
7. ZQ_OPERATION_MODE
8. ZQ_CODE_CMP
9. ZQ_IRDROP_POST
1. DDR_UNIT_DRV
2. DDR_PRE_AMP
3. DDR_PRE_NAND_NOR
4. DDR_PRE_PG_NG_CTRL
5. DDR_PRE_PG_NG_SLEW
6. DDR_PRE_GLITCH
7. DDR_OUTPUT_Voh
8. DDR_OUTPUT_SKEW
9. DDR_OUTPUT_SLEW
10. DDR_OUTPUT_DUTY
11. DDR_DRV_DUTY_CTRL
12. DDR_DRV_CIO
13. DDR_DRV_IDS
14. DDR_DRV_LVcc
14. DDR_DRV_IMDEANCE_POST
1. DDR_RCV_DUTY
2. DDR_RCV_DUTY_VREF
3. DDR_RCV_TR_TF
4. DDR_RCV_MODE
5. DDR_RCV_DVFS_Duty
6. DDR_RCV_NAND

7. DDR_RCV_VILH
8. DDR_RCV_IILH
9. DDR_RCV_SKEW
10. DDR_RCV_IDS
11. DDR_RCV_Hys
12. DDR_RCV_Offset-cal
13. DDR_RCV_EQ
1. DDR_LH_LS_OPERATION
2. DDR_LH_LS_MONTE
3. DDR_LH_LS_LVcc
4. DDR_LH_LS_LSPD
1. DDR_HL_LS_OPERATION
2. DDR_HL_LS_MONTE
3. DDR_HL_LS_LVcc
1. DDR_W_PU_PD
2. DDR_W_PU_PD_SETTLE
3. DDR_W_PU_PD_CMOSRCV
1. DDR_CKE_FUNC_LEAK
2. DDR_CKE_FUNC_PVSENSE
1. Model generation method
2. DataSheet Function Check
3. Timescale
4. Pin Match
5. In Out Relationship
1. OEN to A timing
2. READ to Y/Y_PADN settling time
3. A to PAD delay
4. PAD to Y delay
5. Vref settling time
6. CK-CKE skew
7. DQS Y output slew rate

8. DQS Y, Y_PADN skew
1. VDD/DVDD/DVDDCKE power
1. Break cell usage check
2. Impcnt/Impcnt_ext cell usage check for separate DDS control between DS and CS
3. seperated CK Pad DDS Control check
4. Power Isolation check for CKE/RESET Pad Retention
5. Internal Retention mode check
6. RST_IOV(in POC PAD) connection check
7. tie_high/tie_low signal check
8. No connection(NC) pin check

- **Customer:**
- **IP Name:**
- **Process:**

Check Point
Run BCRsim and check the results of HCI, NBTI, TDDB and DDVC
Run floating node check simulation with specific TB which has options to detect floating node
Run PERC and review the results through Pre-ESD at DPM system
a. Extract post netlist as Sig RC Max b. Run Write/Read mode at once with one DQ cell by DRV/RCV mode control (DRV-Idel-RCV = 3:4:3) c. Attach Ideal 60 ohm resistor at PAD as ODT 60 ohm mode d. Set Vref as half VOH
Must extract verilog model from schematic. Do not manual modify !!!
If the Vref input is unkonw when CMOSRCV=1 condition, the PAD->Y outpue also need to be unknown at ver
Use RX extract post netlist when run post simulation except top level simulation a. RC_min/max netlist: Performance and sensitivity check(I-V curve, receiver duty, comparator) b. C_typ netlist: Charac. and timing check
The PD pin of VREF must not be tied 1(H) at top level a. Ask to check up this to SoC MIF person in charge b. If the PD pin is set to be 1(H), the pvref output is unknow from 20n LPDDR3E IO
Must use VREF PAD at control slice if the ZQ pad needs to use the reference voltage from other PAD except LPDDR4
Must check the ESD_RESCUT / VNCAP voltage / Antenna diode type
a. Make up the top level circuit with DQ+DQS+ZQ+PVREF+CKE b. Check the function of Driver/Receiver/ODT c. current check (dynamic/static current check, no leakage current on Idle(driver: Hi-Z, receiver: power-down
Cross-check the offchip signoff simulation result. (Eye diagram / pad signal fluctuation / Ground bouncing)
Implement a voltage bias generator consisting of a resistance ladder (set range considering POD / VSSQ-TER
Check for bias voltage change after pass-gate
Verify the performance of the unit gain Amp.(DC / AC / TRAN)
Check Vref settling time according to control bit change (normal mode / fast boost / power down / wake-up r
Check current consumption according to mode (power-down / fast boost / normal mode)
Check Vref voltage step according to control bit
Configure data slice (10DQ + DQS + VREF) to check Vref (DC state voltage drop, toggle state fluctuation)
1. Check PD operation (Vref High-z) 2. Check Static Current
Check how much VREF DROP is generated by using Leakage 10X mode (TB should consist of 8 bit data slice ZQ_EXT cell, not RCV equivalent circuit)

Check the voltage difference between DQ VREF and DQS VREF
Check PU/PD unit driver impedance in all PVT (capture the I-V curves)
Check the impedance value when IMPP, IMPN code is applied to DQ PAD-LPDDR4 IO checks the variation of Z unit Tr
Check Comparator offset voltgae (run MONTE simulation for each VT corner)
Comparator max operation speed check
Check current after ZQ operation current and ZQ completion, check PAD state Hi-Z after ZQ completion (che to external resistor is off)
Synthesis block Confirm node to lowercase (Be careful of case conversion when creating LVS netlist!)
Check long / short / external force mode
Check the same code as IMPP: ZCTRL _ PMON, IMPN: ZCTRL _ NMON
Check the IR drop of DRV by using PEX netlist with power extraction (Probe source / drain node voltage of ur
In all PVT conditions, check the PU / PD impednace range 240 ohm + / - 15% coverage, check I-V curve (x: v a. using ZQ cal. Code for each P/V/T - check all impedance 240/120/80/60/48/40/34/30ohm) b. sweep ZQ cal. Code from 0000 to 1111 - check all impedance 240/120/80/60/48/40/34/30ohm)
Check whether the pre-driver node voltage is full-swing (min. 0.95 * securing VDDQ voltage)
Check the NAND / NOR size of the pre-driver (distinguishing the toggle node size from the static node, fixing the size according to loading)
Check the PD/ND waveform and Short current (Idvdd/Idvss) of pre-driver during driver operation (PD on after ND on after PD off during low transition)
Check skew between PC4/2/1, NC4/2/1 signals of pre-driver (skew between signals is required to take slew-r
Check PRE_DRV block and PAD output signal glitch according to READ signal toggle (Do not exceed 3*tCK)
Driver out amplitude check (Voh level check is required because full-swapping is not performed in case of LP
Check skew between CKE / CLK / DQ PAD (feedback to DDRPHY Digital part)
DQ and DQS PAD slew rate check. (with JEDEC test load for each DRAM type)
Driver duty ratio confirmation (48~52) (DQ / DQS respectively)
Check the duty control block function and control range if DCC block used
Check the cio value of DQ PAD (LPDDR4 < 0.7pF Post sim.)
When a driver operates, check the dynamic current according to DDS / ODT setting and check the static curr
Driver LVcc(min. VDD, min. DVDD) check (min. Freq=421MHz, Max=3.2GHz(LP5), LP4X(2.133GHz) ...)
Check the impedance value when IMPP, IMPN code is applied to DQ PAD 1X/2X/4X/8X after layout (Check the
Driver duty ratio check (48:52) (DQ / DQS respectively), PAD-Vref to Y, PADP-PADN to Y, Need to consider inp TERM), small-swing (TERM))
Verify the change of receiver duty according to Vref varation (VREF _ opt + / - 10 mV)
Receiver rise/fall time check.
Check the RCV mode as Normal single-ended mode(DQ), CMOS receiver mode(DQ), single-ended mode(DQS CMOS receiver mode with weak PD
Check receiver LVcc and max. Freq for each Rcv mode considering input swing level :(LP5:250mV~500mV), 360mV~750mV) a. consider LP5 DVFSQ b. DQ:single-ended, DQS:differential for c. CMOS Rcv mode (using weak pull-down enable for DQS)
Check Y to PO timing (for nand tree test, 100MHz) and PI, Y connection (D0-PI, D1-Y connection, ESD conside

Check the reciver Vil/Vih level (test plan Vil/Vih item), monte simulation result check (mean, sigma and 4.5 *
Check the receiver Iil/Iih current, respectively, and verify pull-up/down enable/disable (Iil/Iih item on the test
Check the DQ-DQS receiver skew (PAD to Y, PADP / PADN to Y) (Inform DDRPHY digital part)
Confirmation of dynamic current and static current according to MODE during receiver operation a. Check the receiver power down (PD=1--> Y=0 and static current should not be existed)
check DQS receiver hysterisis(DC simulation) if DQS receiver hysterisis circuit is implemented
check receiver offset-calibration function(check offset difference both offset cal on/off using Monte sim.) if re implemented check receiver duty cycle of each offset cal. code
Check receiver EQ function for CTLE (AC gain,bandwidth)
Low to high level shifter max freq. duty ratio check
6-sigma MONTE simulation: function check (monte iteration number: 1000 per each VT variation) +/-20% VD
Low to high level shifter LVcc check (reduces LVcc margin if the weak pull-up size feedbakc at Y is too large)
Low-speed Low to high level shifter for control signal, optimal size / freq check (10MHz target, minimum size
high to low level shifter max freq. duty ratio check
6-sigma MONTE simulation: function check (monte iteration number: 1000 per each VT variation) +/-20% VD
High to low level shifter LVcc check (reduces LVcc margin if the weak pull-up size feedbakc at Y is too large)
Check the resistance value to guarantee weak pull-up / down function in all PVT conditions
Check the Weak Pull-up/down enable timing in the memory 2load condition and inform the DDRPHY digital m with PAD 0-> 1; PDE: 0-> 1, PAD with 1-> 0 Timing check)
Check the PAD voltage and CMOSRCV output with 6 sigma Monte carlo sim. CMOSRCV output should be low enable.
Confirmation of CKE PAD retention function (Retention function and leakage current at max frequency, leaka be similar to Iil / Iih of DQ)
Check function by connecting GPIO PVSENSE (or POC) PAD and CKERTO port
Check the method of the verilog model generation (1. extract based on functional cell view of sub-block in sc the behavioral model)
Function check corresponding to case of all truth table of DataSheet
Check time unit-> 1ns / 1ps (lpddr4/4x/5)
Check pin match between DBs (circuit-verilog-lib-lef) Comparison report (1) verilog vs .lib, (2) .lib vs circuit,
There are two types of level shifter such as Output = Input (LS) and Output =!Input(LSI)
After checking that there is no problem if OEN transits with A input at the same time, Inform the result to the
In case of ODT ON / OFF controlled by READ, check the setting time of RCV output Y/Y_PADN and inform the engineer
During the write mode, after confirming the A to PAD delay, inform the result to the DDRPHY digital engineer
During the read mode, after confirming the PAD to Y delay, inform the result to the DDRPHY digital engineer
After checking the MAX settling time in the normal mode of PVREF output, inform the result to the DDRPHY
After confirming CK-CKE skew value, inform to the DDRPHY implementation engineer (PVT condition should b engineer)
After confirming the Tr/Tf slew rate of the DQS Y output, inform the DDRPHY implementation engineer (PVT c should be specified by implementation engineer)

When using Y_PADN, which is the PADN-VREF output for PHY DQS cleaning, confirm that the skew with main- ps, inform the result to the DDRPHY digital engineer
Check the power consumption for dynamic and static power
List-up the break cell in DDR IO area and check break is used correctly, check the break cell and break ring
Separate DDS control for DS/CS, impcnt* and break should be used for each DS/CS
Independent DDS control for CK pad,
Separate VDDQ_CKE IO power pad for supportting CKE/RESET retention
To support internal Retention mode, PVSENSE/POC PAD is used?
RST_IOV signal level is not VDD, any devices which use VDD should not connected on RST_IOV path
List-up all tie_hi/low signal on each IO PAD
If there is any NC pin in DDR IO, list up and follow the NC pin spec (power:floating, signal: floating, ground:vs

Simulation Result value	Designer Name

	Number
완료 (OK)	0
미진행	93
해당사항없음	0
불충분	0
진행중	0
완료율 (%)	0/93

Reviewer	Check
	미진행
	미진행
	미진행
	미진행
	미진행
	미진행
	미진행
	미진행
	미진행
	미진행
	미진행
	미진행
	미진행
	미진행
	미진행
	미진행
	미진행
	미진행
	미진행
	미진행
	미진행
	미진행

	미진행
	미진행
	미진행
	미진행
	미진행
	미진행
	미진행
	미진행
	미진행
	미진행
	미진행
	미진행
	미진행
	미진행
	미진행
	미진행
	미진행
	미진행
	미진행
	미진행
	미진행
	미진행
	미진행
	미진행
	미진행
	미진행
	미진행
	미진행
	미진행
	미진행

	미진행
	미진행
	미진행

	미진행
	미진행
	미진행
	미진행
	미진행
	미진행
	미진행
	미진행
	미진행
	미진행

Percentage
0%
100%
0%
0%
0%
0%
Comments(Due date/ResultFile)

7.8 IP Specific(DLL)

Category	Sub Category	Item
DLL	**DLL**	1. sign-off PVT delay check
		2. DVFS corner delay check
		3. dline10 sign-off corner monte simulation(g
		4. gddr3_stcell charac lib check (sign-off corn
		5. Apply functional corner, Verify simulation
		6. EM, IR drop, IVD, check

Check Point
Check DLL lock range for resolution at each corner (tDQ2DQS (200~800ps) / lock range check (excluding gd applied to Valid window margin. best above 18ps
Check DLL lock range for each DVFS. Check if variation of NAND delay compared to inverter delay because NAND delay is worsened @ 0.55v/0.66 for DVFS compensation
Check the duty trend with dline10 because dline10/64/128 are hierarchically similar 1. duty trend check(1%): delay chain duty check (below 1%) (check jitter in full-chip) 2. fine delay resolution check : can only exists in coarse delay
Check if STA based gddr3_stcell is characterized in the same environment as primitive DK. Timing comparison with previous lib, check correctness with spice result, check STA
SPICE simulation should be done at every function corder(SSF/FFF/FSF/SFF) in addition to timing DK conditio
Check for power merge level. (MIF or full-chip glue logic power merge) : DDR_PHY full-chip IR-Drop : 20mV, D double check with slice engineer (1st: slice base, 2nd: full-chip) IR-DROP, 20ps @ 20mV, 1 step delay @ SS

- **Customer:**
- **IP Name:**
- **Process:**

Simulation Result value	Designer Name

	Number
완료 (OK)	0
미진행	6
해당사항없음	0
불충분	0
진행중	0
완료율 (%)	0/6

Reviewer	Check
	미진행
	미진행
	미진행
	미진행
	미진행
	미진행

Percentage
0%
100%
0%
0%
0%
0%
Comments(Due date/ResultFile)

8.1 Bench test(DPHY)

Category	Spec	Parameter
HS-Mode	V1.1/V1.2	ZID
		ZID_up1
		ZID_down1
		ZID_down2
	V1.1	V_{IDTH}
		V_{IDTL}
	V1.2	V_{IDTH}
		V_{IDTL}
	V1.1	Tsetup
		Thold
		Tsetup
		Thold
	V1.2(1.5Gbps)	Tsetup+Thold dynamic
		Tsetup+Thold dynamic
	V1.2(2.1Gbps)	Tsetup+Thold dynamic
		Tsetup+Thold dynamic
	V1.1/V1.2	$V_{CMRX(DC)}$
		V_{IHHS}
		V_{ILHS}
		$DV_{CMRX(HF)}$
		$DV_{CMRX(LF)}$
		Receiver Differential reflection
LP-Mode	V1.1	V_{IH}
	V1.2	V_{IH}
		V_{IL}
		V_{HYST}
		V_{IHCD}
		V_{ILCD}

	V1.1/V1.2	$V_{IL\text{-}ULPS}$
		e_{SPIKE}
		$T_{MIN\text{-}RX}$
		V_{INT}
		f_{INT}

Tx	Spec	Parameter
HS-Mode	**V1.1/V1.2**	HS_Vreg
		V_{CMTX_data}
		DV_{CMTX_data}
		V_{OD_data}
		DV_{OD_data}
		V_{OHHS_data}
	V1.2	tR_data
		tF_data
		$DV_{CMTX(HF)_data}$
		$DV_{CMTX(LF)_data}$
		V_{CMTX_clock}
		DV_{CMTX_clock}
		V_{OD_clock}
		DV_{OD_clock}
		V_{OHHS_clock}
		tR_clock
		tF_clock
		$DV_{CMTX(HF)_clock}$
		$DV_{CMTX(LF)_clock}$
		ZOS(UP)
		ZOS(DOWN)
		DZ_{OS}
		Clk & Data Skew
		UI instantaneous
		HS_align
		Driver Differential reflection
		Z_{OLP_UP}
		Z_{OLP_DOWN}
		TRLP/TFLP
		TREOT

LP-Mode		TLP-PULSE-TX
		TLP-PER-TX
		Slew rate Cload=5pF
		Slew rate Cload=20pF
		Slew rate Cload=70pF
		VOH
		V_{OL}
BIST(Loopback)		Lvcc
		Lvcc
		Lvcc
		Lvcc
Global Timing Operation		$T_{CLK-POST}$
		$T_{CLK-PRE}$
		$T_{CLK-PREPARE}$
		$T_{CLK-TRAIL}$
		$T_{CLK-PREPARE} + T_{CLK-ZERO}$
		$T_{HS-PREPARE}$
		$T_{HS-PREPARE} + T_{HS-ZERO}$
		$T_{HS-EXIT}$
		$T_{HS-TRAIL}$
		T_{EOT}
		T_{LPX}
		T_{TA-GET}
		T_{TA-GO}
		$T_{TA-SURE}$
PLL(Informative)		Frequency
		Jitter(@2.5GHz)
		Jitter(@3.5GHz)
Power Consumption		Pvideo_mode(mW)
		Plp_mode(mW)
		Pulps(mW)
Additional Function Check		Slew Rate Control

TX side	**Te**
	Fixture Setup
	CTS Version

High Speed Data Rate(Mbps)
Infiniium SW Version
Infiniium Model Number
Infiniium Serial Number
Application SW Version
Debug Mode Used
Last Test Date

RX side	**Equipment**
	Vendor

- **Custome**
- **IP Name**
- **Process:**

Description	Unit
Differential input impedance	ohm
Differential input impedance with 01 control	ohm
Differential input impedance with 11 control	ohm
Differential input impedance with 10 control	ohm
Differential input high threshold	mV
Differential input low threshold	mV
Differential input high threshold	mV
Differential input low threshold	mV
Receiver Setup Time (Vid=200mV)	ps
Receiver Hold Time (Vid=200mV)	ps
Receiver Setup Time (Vid=100mV)	ps
Receiver Hold Time (Vid=100mV)	ps
Receiver Setup Time (Vid=200mV)	UI
Receiver Setup Time (Vid=100mV)	UI
Receiver Setup Time (Vid=200mV)	UI
Receiver Setup Time (Vid=100mV)	UI
Common-mode voltage HS receive mode	mV
Single-ended input high voltage	mV
Single-ended input low voltage	mV
Common-mode interference beyond 450 MHz	mV
Common-mode interference 50MHz – 450MHz	mV
0	dB
$f_{LP,MAX}$	dB
fh	dB
f_{MAX}	dB
Logic 1 input voltage	mV
Logic 1 input voltage	mV
Logic 0 input voltage, not in ULP State	mV
Input hysteresis	mV
Logic 1 contention threshold	mV
Logic 0 contention threshold	mV

Logic 0 input voltage, ULP State	mV
Input pulse rejection	V-ps
Minimum pulse width response	ns
Peak interference amplitude	mV
Interference frequency	MHz

Description	Unit
Regulator output voltage for HS-TX	mV
HS transmit static common-mode voltage	mV
VCMTX mismatch when output is Differential-1 or Differential-0	mV
HS transmit differential voltage	mV
VOD mismatch when output is Differential-1 or Differential-0	mV
HS output high voltage	mV
20%-80% rise time	ps
20%-80% fall time	ps
Common-level variations above 450MHz	mVrms
Common-level variations between 50-450MHz	mVpeak
HS transmit static common-mode voltage	mV
VCMTX mismatch when output is Differential-1 or Differential-0	mV
HS transmit differential voltage	mV
VOD mismatch when output is Differential-1 or Differential-0	mV
HS output high voltage	mV
20%-80% rise time	ps
20%-80% fall time	ps
Common-level variations above 450MHz	mVrms
Common-level variations between 50-450MHz	mVpeak
Single ended output impedance	ohm
Single ended output impedance	ohm
Single ended output impedance mismatch	%
Clk-data timing skew at 2.1Gbps	ps
HS Clock Instantaneous (UIinst)	ns
HS Clock Rising Edge Alignment to First Payload Bit	
$f_{LP,MAX}$	dB
fh	dB
f_{MAX}	dB
Output impedance of LP transmitter	ohm
Output impedance of LP transmitter	ohm
15%-85% rise time and fall time	ns
30%-85% Post-EOT rise time	ns

Pulse width of the LP exclusive-OR clock (First LP exclusive-OR clock pulse after Stop state, or last XOR clock pulse before Stop state)	ns
All other pulses	ns
Period of the LP exclusive-OR clock	ns
Slew Rate @ Cload=5pF	mV/ns
Slew Rate @ Cload=20pF	mV/ns
Slew Rate @ Cload=70pF	mV/ns
Thevenin output high level(Internal 1.2V Regulator Output)	V
Thevenin output low level	mV
Lvcc margin at 1500Mbps	mV
Lvcc margin at 1500Mbps with Skew Calibraion	mV
Lvcc margin at 2100Mbps	mV
Lvcc margin at 2100Mbps with Skew Calibration	mV
Time sending HS clock after Data Lane go to LP	ns
Time sending HS clock before Data Lane go to HS	UI
Time to drive LP-00 for HS clock	ns
Time to drive HS after last payload clock bit of HS	ns
-	ns
Time to drive LP-00 for HS transmission	ns
-	ns
Time to drive LP-11 after HS burst	ns
Time to drive HS after last payload data bit of HS	ns
Time from start of Ths-trail or Tclk_trail period to start of LP11 state	ns
Length of any Low-Power state period	ns
Time to drive LP-00 by new TX	ns
Time to drive LP-00 BTA request	ns
Time-out before new TX side starts driving	ns
	MHz
	ps(p2p)
	ps(p2p)
HighSpeed mode Power Consumption(1Gbps, 1 Tx + 1 Rx)	
LowPower mode Power Consumption	
ULPS Power Consumption	
code(000)- rise and fall time, 500Mbps	ps
code(100)- rise and fall time, 500Mbps	ps

st Configuration Details
Device Description
Auto Load Switching Board + 4 Probes
v1.00

Test Session Details
03.11.0004
DSO91304A
MY51260165
2.4
No
3/5/2014 5:43:52 PM

Par BERT
Agilent

er:

:

:

Specification			Simulation result		
Min	Nor	Max	Min	Nor	Max
80	100	125			
80	100	125			
80	100	125			
80	100	125			
		70			
-70					
		40			
-40					
		133			
		133			
		133			
		133			
		0.5			
		0.5			
		0.5			
		0.5			
70		330			
		460			
-40					
		100			
-50		50			
		-18			
		-18			
		-9			
		-3			
880					
740					
		550			
25					
450					
		200			

		300			
		300			
20					
		200			
450					

Specification			Simulation result		
Min	**Nor**	**Max**	**Min**	**Nor**	**Max**
360	400	440			
150	200	250			
		5			
140	200	270			
		14			
		360			
150ps		0.3UI			
150ps		0.3UI			
		15			
		25			
150	200	250			
		5			
140	200	270			
		10			
		360			
150ps		0.3UI			
150ps		0.3UI			
		15			
		25			
40	50	62.5			
40	50	62.5			
		10			
-0.15UI	0	0.15UI			
		12.5			
	pass/fail				
		-18			
		-9			
		-3			
110					
110					
		25			
		35			

40					
20					
90					
30		300			
30		250			
30		150			
1.1	1.2	1.3			
-50		50			
0.9VDD					
0.9VDD					
0.9VDD					
0.9VDD					
60+52UI					
8					
38		95			
60					
300					
40+4UI		85+6UI			
145+10UI					
100					
60+4*UI					
		105+12UI			
50					
5*Tlpx					
4*Tlpx					
Tlpx		2Tlpx			
-	-	20			
-	-	7			
-	-	0.1			
-	-	-			
-	-	-			

The frequency ‘fh’ is the highest fundamental frequency for data transr
The frequency ‘fhMAX’ is a device specification and indicates the maxin
The frequency ‘fLP,MAX’ is the maximum toggle frequency for Low-Pow
RF interference frequencies are denoted by ‘fINT’, where fINT,MIN defin

The frequency fMAX is defined by the maximum of (1/5tF,MIN, 1/5tR,MI

Measured			EDS/ATE	Bench Test
Min	Nor	Max		
			X	O
			X	O
			X	O

			O	X
			X	O
			X	O
			X	O
			X	O

Measured			EDS/ATE	Bench Test
Min	Nor	Max		
			O	O
			X	O
			X	O
			X

			X	O
			X	O
			X	O
			X	O
			X	O
			X	O
			O	O
			X	O
			O	O
			O	O
			O	O
			O	O
			X	O
			X	O
			X	O
			X	O
			X	O
			X	O
			X	O
			X	O
			X	O
			X	O
			X	O
			X	O
			X	O
			X	O
			X	O
			X	O
			X	O
			X	O
			X	O
			O	O
			X	O
			X	O

nission
num supported fh for a particular device.
er mode.
es the lower bound for the band of relevant RF interferers.

N), where tR and tF are the rise and fall times of the High-Speed signa

# of parts/ Corner	VDD		Temp. Test
	-10%	10%	
5	O	O	X
5	O	O	X
5	O	O	X

5	O	O	X
5	O	O	X
5	O	O	X
5	O	O	X
5	O	O	X

# of parts/ Corner	VDD		Temp. Test
	-10%	10%	
30	O	O	O
5	O	O	X
5	O	O	X
5	O	O	X
5	O	O	X
5	O	O	X
5	O	O	X
5	O	O	X
5	O	O	X
5	O	O	X
5	O	O	X
5	O	O	X
5	O	O	X
5	O	O	X
5	O	O	X
5	O	O	X
5	O	O	X
5	O	O	X
5	O	O	X
5	O	O	X
5	O	O	X
5	O	O	X
5	O	O	X
5	O	O	X
5	O	O	X
5	O	O	X
5	O	O	X
5	O	O	X
5	O	O	X
5	O	O	X
5	O	O	X

5	O	O	X
5	O	O	X
5	O	O	X
5	O	O	X
5	O	O	X
5	O	O	X
5	O	O	O
5	O	O	X
5	O	O	X
5	O	O	X
5	O	O	X
5	O	O	X
5	O	O	X
5	O	O	X
5	O	O	X
5	O	O	X
5	O	O	X
5	O	O	X
5	O	O	X
5	O	O	X
5	O	O	X
5	O	O	X
5	O	O	X
5	O	O	X
5	O	O	X
5	O	O	X
5	O	O	X
1	O	O	X
1	O	O	X
5	O	O	X
5	O	O	X
5	O	O	O
5	O	O	X
5	O	O	X

ıling.

	Number	Percentage
완료 (OK)	0	0%
미진행	102	100%
해당사항없음	0	0%
불충분	0	0%
진행중	0	0%
완료율 (%)	0/102	**0%**

Designer Name	Reviewer	Check
		미진행
		미진행
		미진행

		미진행
		미진행
		미진행
		미진행
		미진행

Designer Name	Reviewer	Check
		미진행
		미진행
		미진행
		미진행
		미진행
		미진행
		미진행
		미진행
		미진행
		미진행
		미진행
		미진행
		미진행
		미진행
		미진행
		미진행
		미진행
		미진행
		미진행
		미진행
		미진행
		미진행
		미진행
		미진행
		미진행
		미진행
		미진행
		미진행
		미진행
		미진행
		미진행
		미진행
		미진행

		미진행
		미진행
		미진행

8.2 Bench test(MPHY)

Category	Spec	Parameter
RX	Common RX	$V_{DIF_RT_RX}$
		$V_{DIF_NT_RX}$
		V_{CM_RX}
		R_{DIF_RX}
	HS	$V_{DIF_ACC_RX}$
		$V_{DIF_ACC_HS_G2_RX}$
		$V_{DIF_ACC_HS_G3_RX}$
		V_{EYE_RX}
		$V_{EYE_HS_G3_RX}$
		T_{PULSE_RX}
		$DJ_{_RX}$
		$SJ_{RX}(f)$
		$STDJ_{RX}$
		TJ_{RX}
		$STTJ_{RX}$
		$V_{DIF_ACC_RX}$
		$T_{PWM_G1_RX}$
		$T_{PWM_G2_RX}$
		$T_{PWM_G3_RX}$
		$T_{PWM_G4_RX}$
		$T_{PWM_G5_RX}$
		$T_{PWM_G6_RX}$
		$T_{PWM_G7_RX}$
		TOL_{PWM_RX}
		$TOL_{PWM_G1_LR_RX}$
		$T_{R_PWM_RX}$
		$T_{F_PWM_RX}$
		$V_{DIF_DC_LA_RT_TX}$
		$V_{DIF_AC_LA_RT_TX}$
		$V_{DIF_DC_LA_NT_TX}$

TX	**Common TX**	$V_{DIF_AC_LA_NT_TX}$
		$V_{CM_LA_TX}$
		R_{SE_TX}
		$R_{SE_PO_TX}$
	HS	$V_{DIF_AC_HS_G3}$
		$T_{F_HS_TX}$
		$T_{R_HS_TX}$
		SR_{DIF_TX}
		$T_{INTRA_SKEW_TX}$
		T_{PULSE_TX}
		ΔR_{SE_TX}
		T_{EYE_TX}
		$T_{EYE_HS_G3_TX}$
		DJ_{TX}
		TJ_{TX}
		$STDJ_{TX}$
		$STTJ_{TX}$
		f_{OFFSET_TX}
		EQ2_TX
		$T_{PWM_G1_TX}$
		$T_{PWM_G2_TX}$
		$T_{PWM_G3_TX}$
		$T_{PWM_G4_TX}$
		$T_{PWM_G5_TX}$
		$T_{PWM_G6_TX}$
		$T_{PWM_G7_TX}$
		TOL_{PWM_TX}
		$TR_{R_PWM_TX}$
		$TR_{F_PWM_TX}$
SQ		V_{SQ}
		V_{DIF_SQ}
		V_{CM_SQ}
		fsq
BIST(Internal Loopback)		Lvcc
		Lvcc
		Lvcc
		Lvcc
		Lvcc
		Lvcc
		Lvcc
		Lvcc

BIST(External Loopback)		Lvcc
		Lvcc
		Lvcc
		Lvcc
PLL(Informative)		Frequency
		Jitter
		Jitter
		Jitter
		Jitter
		Jitter
		Jitter
Global Timing Operation		T_{PLL_LOCK}
		T_{CDR_LOCK}
Power Consumption		HSG1A(mW)
		HSG1B(mW)
		HS2A(mW)
		HS2B(mW)
		HS3A(mW)
		HS3B(mW)
		PWMG1(mW)
		PWMG2(mW)
		PWMG3(mW)
		PWMG4(mW)
		PWMG5(mW)
		PWMG6(mW)
		PWMG7(mW)
		Hibern8
		SLEEP
		STALL

■ **Custome**
■ **IP Name**
■ **Process:**

Description	Unit
Differential RX voltage amplitude in terminated state	mV
Differential RX voltage amplitude in not terminated state	mV
RX common-mode voltage	mV
Differential input resistance	Ω
Accumulated differential receiver input voltage for HS G1	mV
Accumulated differential receiver input voltage for HS G2	mV
Accumulated differential receiver input voltage for HS G3	mV
Receiver eye opening	UI_{HS}
Receiver eye opening in HSG-3	UI_{HS}
Receiver eye opening	UI_{HS}
Receiver pulse width.	UI_{HS}
Receiver sinusoidal jitter toerance $f_{C_HS_RX}$ to f_{SJ4_RX}	UI_{HS}
Receiver sinusoidal jitter toerance f_{SJ0_RX} to $f_{C_HS_RX}$	UI_{HS}
Receiver deterministic jiter from f_{SJ4_RX} to f_{U_RX}	UI_{HS}
Receiver total jitter tolerance	UI_{HS}
Receiver total jiter from f_{SJ4_RX} to f_{U_RX}	UI_{HS}
Accumulated diff. RX voltage amplitude in PWM-G 1, 2,3,4	mv
PWM receiver bit duration in PWM-G1 (Need JBERT SW)	us
PWM receiver bit duration in PWM-G2 (Need JBERT SW)	us
PWM receiver bit duration in PWM-G3 (Need JBERT SW)	us
PWM receiver bit duration in PWM-G4 (Need JBERT SW)	us
PWM receiver bit duration in PWM-G5 (Need JBERT SW)	us
PWM receiver bit duration in PWM-G6 (Need JBERT SW)	us
PWM receiver bit duration in PWM-G7 (Need JBERT SW)	us
PWM receive bit duration tolerance in PWM-G1	
PWM receive bit duration tolerance in PWM	
Rise time	T_{PWM_RX}
Fall time	T_{PWM_RX}
Large Amp differential TX DC when the M-TX is terminated	mV
Large Amp differential TX AC when the M-TX is terminated	mV
Large Amp differential TX DC when the M-TX is not terminated	mV

Large Amp differential TX AC when the M-TX is not terminated	mV
LA common-mode TX vlotage	mV
Single-ended output resistance	Ω
Single-ended output resistance	kΩ
Diff. TX AC voltage	mV
Fall time	UI_{HS}
Rise time	UI_{HS}
Slew Rate	V/ns
Intra-Lane output skew	UI_{HS}
Transmitter pulse width	UI_{HS}
Output resistance mismatch	Ω
Transmitter eye opening HSG1 and HSG2	UI_{HS}
Transmitter eye opening HSG3	UI_{HS}
Transmitter deterministic jitter	UI_{HS}
Transmitter total jitter	UI_{HS}
Transmitter short term deterministic jitter	UI_{HS}
Transmitter short term total jitter	UI_{HS}
Transmitter Data Frequency offset	ppm
De-emphasis ratio defined for Large Amp. Diff. TX	dB
PWM transmit bit duration in PWM-G1	
PWM transmit bit duration in PWM-G2	
PWM transmit bit duration in PWM-G3	
PWM transmit bit duration in PWM-G4	
PWM transmit bit duration in PWM-G5	
PWM transmit bit duration in PWM-G6	
PWM transmit bit duration in PWM-G7	
PWM transmit bit duration tolerance	
Rise time	TPWM_TX
Fall time	TPWM_TX
Squelch exit Voltage	mv
Squelch diff. Voltage	mv
Squelch common-mode Voltage	mv
Squelch buffer bandwidth	MHz
Lvcc margin at G1A	mV
Lvcc margin at G1B	mV
Lvcc margin at G2A	mV
Lvcc margin at G2B	
Lvcc margin at G3A	
Lvcc margin at G3B	mV
Lvcc margin at G1A	mV
Lvcc margin at G1B	mV

Lvcc margin at G2A	mV
Lvcc margin at G2B	
Lvcc margin at G3A	
Lvcc margin at G3B	mV
PLL Lock Frequency	MHz
PLL jitter at G1A	ps(p2p)
PLL jitter at G1B	ps(p2p)
PLL jitter at G2A	ps(p2p)
PLL jitter at G2B	ps(p2p)
PLL jitter at G3A	ps(p2p)
PLL jitter at G3B	ps(p2p)
PLL LOCK time setting based on AFC code change	setting bits
CDR LOCK time setting based on AFC code change	setting bits
HS G1A Power	mW
HS G1B Power	mW
HS G2A Power	mW
HS G2B Power	mW
HS G3A Power	mW
HS G3B Power	mW
PWM G1 Power	mW
PWM G2 Power	mW
PWM G3 Power	mW
PWM G4 Power	mW
PWM G5 Power	mW
PWM G6 Power	mW
PWM G7 Power	mW
Hibern8 mode power	mW
SLEEP mode power	mW
STALL mode power	mW

er:

:

Specification			Simulation result		
Min	Nor	Max	Min	Nor	Max
60		245			
120		490			
25		330			
80		110			
40					
40					
40					
0.2					
$1-TJ_{RX}$					
0.8					
		0.35			
		0.15			
		$0.15*f_{C_HS_RX}/f$			
		0.2			
		0.52			
40					
1/9		1/3			
1/18		1/6			
1/36		1/12			
1/71		1/24			
1/144		1/48			
1/288		1/96			
1/576		1/192			
0.82		1.18			
0.89		1.11			
		0.14			
		0.14			
160		240			
140		250			
320		480			

280		500			
160		260			
40		60			
		10			
40					
0.1					
0.1					
0.35		0.9			
-0.06		0.06			
1%					
-6		6			
0.2					
0.55					
		0.15			
		0.32			
		0.1			
		0.2			
-2000		2000			
5		7			
1/9		1/3			
1/18		1/6			
1/36		1/12			
1/72		1/24			
1/144		1/48			
1/288		1/96			
1/576		1/192			
0.9		1.10			
		0.070			
		0.070			
50		140			
		20			
0		330			
0.9VDD					
0.9VDD					
0.9VDD					
0.9VDD					
0.9VDD					
0.9VDD					

0.9VDD					
0.9VDD					
-	-				
-	-				
-	-				
-	-				
-	-				
-	-				
-	-				
-	-				
-	-				
-	-				
-	-				
-	-				
-	-				
-	-				
-	-				
-	-				
-	-				

Measured			EDS/ATE	Bench Test
Min	Nor	Max		

# of parts/ Corner	VDD		Temp. Test
	-10%	10%	

	Number	Percentage
완료 (OK)	0	0%
미진행	101	100%
해당사항없음	0	0%
불충분	0	0%
진행중	0	0%
완료율 (%)	0/101	**0%**

Designer Name	Reviewer	Check
		미진행
		미진행
		미진행

		미진행
		미진행
		미진행

		미진행
		미진행
		미진행

8.3 Bench test(HDM

HDMI	Parameter
TX	Clock jitter
	D0-Mask Test
	D0-Data Jitter
	D1-Mask Test
	D1-Data Jitter
	D2-Mask Test
	D2-Data Test
	Clock Rise Time
	Clock Fall Time
	D0-Rise Time
	D0-Fall Time
	D1-Rise Time
	D1-Fall Time
	D2-Rise Time
	D2-Fall Time
	Clck Duty Cycle[Min.]
	Clcok Duty Cycle(Max.)
	Inter-Pair Skew - D0/D1
	Inter-Pair Skew - D0/D2
	Inter-Pair Skew - D1/D2

MI)

- **Custome**
- **IP Name**
- **Process:**

Description	Unit
TMDS Clock Jitter	< 0.25UI
Channel 0 Mask Test	-
Channel 0 Jitter	< 0.3UI
Channel 1 Mask Test	-
Channel 1 Jitter	< 0.3UI
Channel 2 Mask Test	-
Channel 2 Jitter	< 0.3UI
TMDS Clock Rise Time	> 75ps
TMDS Clock Fall Time	> 75ps
Channel 0 Rise time	> 75ps
Channel 0 Fall time	> 75ps
Channel 1 Rise time	> 75ps
Channel 1 Fall time	> 75ps
Channel 2 Rise time	> 75ps
Channel 2 Fall time	> 75ps
Minimum Clock Duty cycle	>= 40%
Maximum Clock Duty cycle	<= 60%
Skew between D0 and D1	mTpixel
Skew between D0 and D2	mTpixel
Skew between D1 and D2	mTpixel

er:

:

:

Specification			Simulation result		
Min	**Nor**	**Max**	**Min**	**Nor**	**Max**
		0.25			
		0.3			
		0.3			
		0.3			
75					
75					
75					
75					
75					
75					
75					
75					
>= 40%					
		<= 60%			
-200		200			
-200		200			
-200		200			

Measured			EDS/ATE	Bench Test
Min	Nor	Max		
			X	O
			X	O
			X	O
			X	O
			X	O
			X	O
			X	O
			X	O
			X	O
			X	O
			X	O
			X	O
			X	O
			X	O
			X	O
			X	O
			X	O
			X	O
			X	O
			X	O

# of parts/ Corner	VDD		Temp. Test
	-10%	10%	
5	O	O	X
5	O	O	X
5	O	O	X
5	O	O	X
5	O	O	X
5	O	O	X
5	O	O	X
5	O	O	X
5	O	O	X
5	O	O	X
5	O	O	X
5	O	O	X
5	O	O	X
5	O	O	X
5	O	O	X
5	O	O	X
5	O	O	X
5	O	O	X
5	O	O	X
5	O	O	X
5	O	O	X

	Number	Percentage
완료 (OK)	0	0%
미진행	20	100%
해당사항없음	0	0%
불충분	0	0%
진행중	0	0%
완료율 (%)	0/20	**0%**

Designer Name	Reviewer	Check
		미진행
		미진행
		미진행
		미진행
		미진행
		미진행
		미진행
		미진행
		미진행
		미진행
		미진행
		미진행
		미진행
		미진행
		미진행
		미진행
		미진행
		미진행
		미진행
		미진행

8.4 B

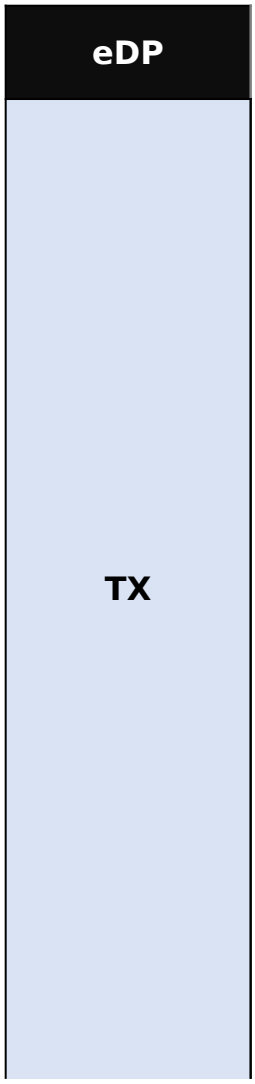

ench test(eDP)

Parameter
Lane 0/ Lane 1 - Inter Pair Skew Test
Main Link Frequency Compliance
SSC Modulation Frequency Test
SSC Modulation Deviation Test
Intra Pair Skew Test
PLTPAT - Non-PreEmphasis Level Test (Swing 2/ Swing 0)
PLTPAT - Non-PreEmphasis Level Test (Swing 2/ Swing 1)
PLTPAT - Non-Transition Voltage Range Measurement (Swing 2)
PLTPAT - Non-Transition Voltage Range Measurement (Swing 1)
D10.2 Total Jitter Test (TP3_EQ)
D10.2 Deterministic Jitter (TP3_EQ)
D10.2 Random Jitter (TP3_EQ)
CPAT2600 Eye Diagram Test (TP3_EQ)
CPAT2600 Total Jitter Test (TP3_EQ)
CPAT2600 Deterministic Jitter Test (TP3_EQ)
PLTPAT - Non-Transition Voltage Range Measurement (Swing 0)
PLTPAT - Non-PreEmphasis Level Test (Swing 3/ Swing 2)
PLTPAT - Pre-Emphasis Level Test (Pre-emphasis 0)
PLTPAT - Pre-Emphasis Level Delta Test (Pre-emphasis 1 to Pre-emphasis 0)
PLTPAT - Pre-Emphasis Level Delta Test (Pre-emphasis 1 to Pre-emphasis 2)
PLTPAT - Pre-Emphasis Level Delta Test (Pre-emphasis 2 to Pre-emphasis 3)

■ **Customer:**
■ **IP Name:**
■ **Process:**

Unit	Specification			Simulation res	
	Min	**Nor**	**Max**	**Min**	**Nor**
UI	13.3		26.7		
ppm	-5,300		300		
kHz	30		33		
kHz	-5,000		0		
ps			30		
dB	5.2		6.9		
dB	**1.6**		**3.5**		
mV	**708**				
mV	708				
mUI			400		
mUI			250		
mUI			580		
mUI			490		
mV	850				
dB	1		4.4		
dB			0.25		
dB	2				
dB	1.6				
dB	1.6				

sult	Measured			EDS/ATE	Bench Test
Max	Min	Nor	Max		
				X	O
				X	O
				X	O
				X	O
				X	O
				X	O
				X	O
				X	O
				X	O
				X	O
				X	O
				X	O
				X	O
				X	O
				X	O
				X	O
				X	O
				X	O
				X	O
				X	O
				X	O

# of parts/ Corner	VDD		Temp. Test
	-10%	10%	
5	O	O	X
5	O	O	X
5	O	O	X
5	O	O	X
5	O	O	X
5	O	O	X
5	O	O	X
5	O	O	X
5	O	O	X
5	O	O	X
5	O	O	X
5	O	O	X
5	O	O	X
5	O	O	X
5	O	O	X
5	O	O	X
5	O	O	X
5	O	O	X
5	O	O	X
5	O	O	X
5	O	O	X

	Number	Percentage
완료 (OK)	0	0%
미진행	21	100%
해당사항없음	0	0%
불충분	0	0%
진행중	0	0%
완료율 (%)	0/21	**0%**

Designer Name	Reviewer	Check
		미진행
		미진행
		미진행
		미진행
		미진행
		미진행
		미진행
		미진행
		미진행
		미진행
		미진행
		미진행
		미진행
		미진행
		미진행
		미진행
		미진행
		미진행
		미진행
		미진행

9.1 ATE test(DPHY)

Category	Sub-category
Master	Master Clock LP-TX
	Master Data LP-TX
	Master Data LP-RX
	Master Data LP-CD
Slave	Slave Clock LP-RX
	Slave Data LP-RX
Master & Slave	PLL Frequency
	Internal HS loopback_80Mbps
	External HS loopback_80Mbps
	Internal HS loopback_480Mbps
	External HS loopback_480Mbps
	Internal HS loopback_1000Mbps
	External HS loopback_1000Mbps
	Internal HS loopback_1500Mbps
	External HS loopback_1500Mbps
	Internal HS loopback_2100Mbps
	External HS loopback_2100Mbps
	HS TX regulator voltage
	LP TX regulator voltage
	PHY SCAN
	PHY IDS(Power down current)

Item
LP TX
LP TX
LP RX
LP CD
LP RX
LP RX
PLL Frequency measure
internal loopback test for 80Mbps
external loopback test for 80Mbps
internal loopback test for 480Mbps
external loopback test for 480Mbps
internal loopback test for 1000Mbps
external loopback test for 1000Mbps
internal loopback test for 1500Mbps
external loopback test for 1500Mbps
internal loopback test for 2100Mbps
external loopback test for 2100Mbps
0.4V regulator output measurement
1.2V regulator output measurement
SCAN test for phy digital block
PHY leakage current measurement

- **Customer:**
- **IP Name:**
- **Process:**

Check point
LP TX function check
LP TX function check
LP RX function check with VIL/VIH
LP CD function check
LP RX function check with VIL/VIH
LP RX function check with VIL/VIH
PLL operation
PHY HS BIST for 80Mbps
PHY HS BIST for 80Mbps
PHY HS BIST for 480Mbps
PHY HS BIST for 480Mbps
PHY HS BIST for 1000Mbps
PHY HS BIST for 1000Mbps
PHY HS BIST for 1500Mbps
PHY HS BIST for 1500Mbps
PHY HS BIST for 2100Mbps
PHY HS BIST for 2100Mbps
400mV +- 10%
1.2V +- 10%
check process defect

	Number	Percentage
완료 (OK)	0	0%
미진행	21	100%
해당사항없음	0	0%
불충분	0	0%
진행중	0	0%
완료율 (%)	0/21	**0%**

Designer	Vector delivery	Comment
	미진행	
	미진행	
	미진행	
	미진행	
	미진행	
	미진행	
	미진행	
	미진행	
	미진행	
	미진행	
	미진행	
	미진행	
	미진행	
	미진행	
	미진행	
	미진행	
	미진행	
	미진행	
	미진행	
	미진행	
	미진행	

Number	Percentage
0	0%
21	100%
0	0%
0	0%
0	0%
0/21	**0%**

Vector evaluation	Comment
미진행	
미진행	
미진행	
미진행	
미진행	
미진행	
미진행	
미진행	
미진행	
미진행	
미진행	
미진행	
미진행	
미진행	
미진행	
미진행	
미진행	
미진행	
미진행	
미진행	
미진행	
미진행	

9.2 ATE test(MPHY)

Category	Sub-category
HS GEAR INT_LB	HS GEAR INT_LB
HS GEAR EXT_LB	HS GEAR EXT_LB
PWM BIST	PWM BIST
RX SQ	RX SQ
Power-down current	Power-down current
Hibernation current	Hibernation current
PHY normal current	PHY normal current
NANDTREE	NANDTREE
SCAN	SCAN

Item
HS_GEAR_1A Internal Serial Loopback
HS_GEAR_1B Internal Serial Loopback
HS_GEAR_2A Internal Serial Loopback
HS_GEAR_2B Internal Serial Loopback
HS_GEAR_3A Internal Serial Loopback
HS_GEAR_1A External Serial Loopback
HS_GEAR_1B External Serial Loopback
HS_GEAR_2A External Serial Loopback
HS_GEAR_2B External Serial Loopback
PWM _GEAR1_BIST_OS
PWM _GEAR1_BIST
PWM _GEAR2_BIST
PWM _GEAR3_BIST
PWM _GEAR4_L_BIST
PWM _GEAR4_H_BIST
PWM _GEAR5_L_BIST
PWM _GEAR5_H_BIST
Squelch detector sensitivity
PHY Leakage current
Hibernation current
MPHY Gear3b normal current
MPHY Gear3a normal current
NandTree
SCAN

■ **Customer:**
■ **IP Name:**
■ **Process:**

Check point
HS_GEAR1A_INT_SLB
HS_GEAR1B_INT_SLB
HS_GEAR2A_INT_SLB
HS_GEAR2B_INT_SLB
HS_GEAR3A_INT_SLB
HS_GEAR1A_EXT_SLB
HS_GEAR1B_EXT_SLB
HS_GEAR2A_EXT_SLB
HS_GEAR2B_EXT_SLB
PWM _GEAR1_BIST_OS
PWM _GEAR1_BIST
PWM _GEAR2_BIST
PWM _GEAR3_BIST
PWM _GEAR4_L_BIST
PWM _GEAR4_H_BIST
PWM _GEAR5_L_BIST
PWM _GEAR5_H_BIST
SQ_SENSITIVITY
PHY_IDS
PHY_IHIBERN8
PHY_IDD_G3B
PHY_IDD_G3A
NandTree
Scan

	Number	Percentage
완료 (OK)	0	0%
미진행	24	100%
해당사항없음	0	0%
불충분	0	0%
진행중	0	0%
완료율 (%)	0/24	**0%**

Designer	Vector delivery	Comment
	미진행	
	미진행	
	미진행	
	미진행	
	미진행	
	미진행	
	미진행	
	미진행	
	미진행	
	미진행	
	미진행	
	미진행	
	미진행	
	미진행	
	미진행	
	미진행	
	미진행	
	미진행	
	미진행	
	미진행	
	미진행	
	미진행	
	미진행	
	미진행	

Number	Percentage
0	0%
24	100%
0	0%
0	0%
0	0%
0/24	**0%**

Vector evaluation	Comment
미진행	
미진행	
미진행	
미진행	
미진행	
미진행	
미진행	
미진행	
미진행	
미진행	
미진행	
미진행	
미진행	
미진행	
미진행	
미진행	
미진행	
미진행	
미진행	
미진행	
미진행	
미진행	
미진행	
미진행	

9.3 ATE test(HDMI)

Category	Sub-category
DC_LEVEL	DC_LEVEL_0_ON/OFF
	DC_LEVEL_1_ON/OFF
IDS	IDS
IDD	IDD
INT_LB	INT_LB
TX_DRIVER	TX_DRIVER

Item
DC_LEVEL_0_ON
DC_LEVEL_0_OFF
DC_LEVEL_1_ON
DC_LEVEL_1_OFF
IDS
IDD_297MHz_8bit
INT_LB_297MHz_8bit
INT_LB_162MHz_12bit
INT_LB_162MHz_10bit
INT_LB_148_352MHz_8bit
INT_LB_74_25MHz_8bit
INT_LB_72MHz_8bit
INT_LB_27MHz_8bit
INT_LB_25MHz_10bit
TX_DRIVER_148_352MHz_8bit

- **Customer:**
- **IP Name:**
- **Process:**

Check point
TXN/P level (Source termination on)
TXN/P level (Source termination off)
TXN/P level (Source termination on)
TXN/P level (Source termination off)
Leakage current
Dynamic current (Worst case with PRBS7)
BIST pass / fail, frequency of TESTOUT clock
BIST pass / fail, frequency of TESTOUT clock
BIST pass / fail, frequency of TESTOUT clock
BIST pass / fail, frequency of TESTOUT clock
BIST pass / fail, frequency of TESTOUT clock
BIST pass / fail, frequency of TESTOUT clock
BIST pass / fail, frequency of TESTOUT clock
BIST pass / fail, frequency of TESTOUT clock
TX Driver test (148.352MHz 8bit)

	Number	Percentage
완료 (OK)	0	0%
미진행	15	100%
해당사항없음	0	0%
불충분	0	0%
진행중	0	0%
완료율 (%)	0/15	**0%**

Designer	Vector delivery	Comment
	미진행	
	미진행	
	미진행	
	미진행	
	미진행	
	미진행	
	미진행	
	미진행	
	미진행	
	미진행	
	미진행	
	미진행	
	미진행	
	미진행	
	미진행	

Number	Percentage
0	0%
15	100%
0	0%
0	0%
0	0%
0/15	**0%**

Vector evaluation	Comment
미진행	
미진행	
미진행	
미진행	
미진행	
미진행	
미진행	
미진행	
미진행	
미진행	
미진행	
미진행	
미진행	
미진행	
미진행	

9.4 ATE test(eDP)

Category	Sub-category
DC_LEVEL	DC_LEVEL_0
	DC_LEVEL_1
IDS	IDS
IDD	IDD
INT_LB	INT_LB
TX_DRIVER	TX_DRIVER
AUX	AUX_TX
	AUX_RX
NORMAL_TX	DC pattern
	Toggled pattern

Item
DC_LEVEL_0_ON
DC_LEVEL_1_ON
IDS
IDD_26MHz_HBR
INT_LB_24MHz_RBR
INT_LB_24MHz_HBR
INT_LB_24MHz_HBR2
INT_LB_26MHz_RBR
INT_LB_26MHz_HBR
INT_LB_26MHz_HBR2
INT_LB_24MHz_HBR2_from_bridge_logic
TX_DRIVER_26MHz_RBR
AUX_TX_1MHz
AUX_RX_1MHz
NORMAL_TX
NORMAL_TX_WITH_TOGGLED_PATTERN

- **Customer:**
- **IP Name:**
- **Process:**

Check point
TXN/P level
TXN/P level
Leakage current
Dynamic current (Worst case with PRBS7)
BIST pass / fail, frequency of byte clock
BIST pass / fail, frequency of byte clock
BIST pass / fail, frequency of byte clock
BIST pass / fail, frequency of byte clock
BIST pass / fail, frequency of byte clock
BIST pass / fail, frequency of byte clock
BIST pass / fail, frequency of byte clock
Frequency of TXN/P
AUX TX test (1MHz)
AUX RX test (1MHz)
Serialized value of TXN/P
Serialized value of TXN/P

	Number	Percentage
완료 (OK)	0	0%
미진행	16	100%
해당사항없음	0	0%
불충분	0	0%
진행중	0	0%
완료율 (%)	0/16	**0%**

Designer	Vector delivery	Comment
	미진행	
	미진행	
	미진행	
	미진행	
	미진행	
	미진행	
	미진행	
	미진행	
	미진행	
	미진행	
	미진행	
	미진행	
	미진행	
	미진행	
	미진행	
	미진행	

Number	Percentage
0	0%
16	100%
0	0%
0	0%
0	0%
0/16	**0%**

Vector evaluation	Comment
미진행	
미진행	
미진행	
미진행	
미진행	
미진행	
미진행	
미진행	
미진행	
미진행	
미진행	
미진행	
미진행	
미진행	
미진행	
미진행	